GLIDEROL garage doors

Glidermatic GRD+

Heavy Duty Automatic Roller Door Operator

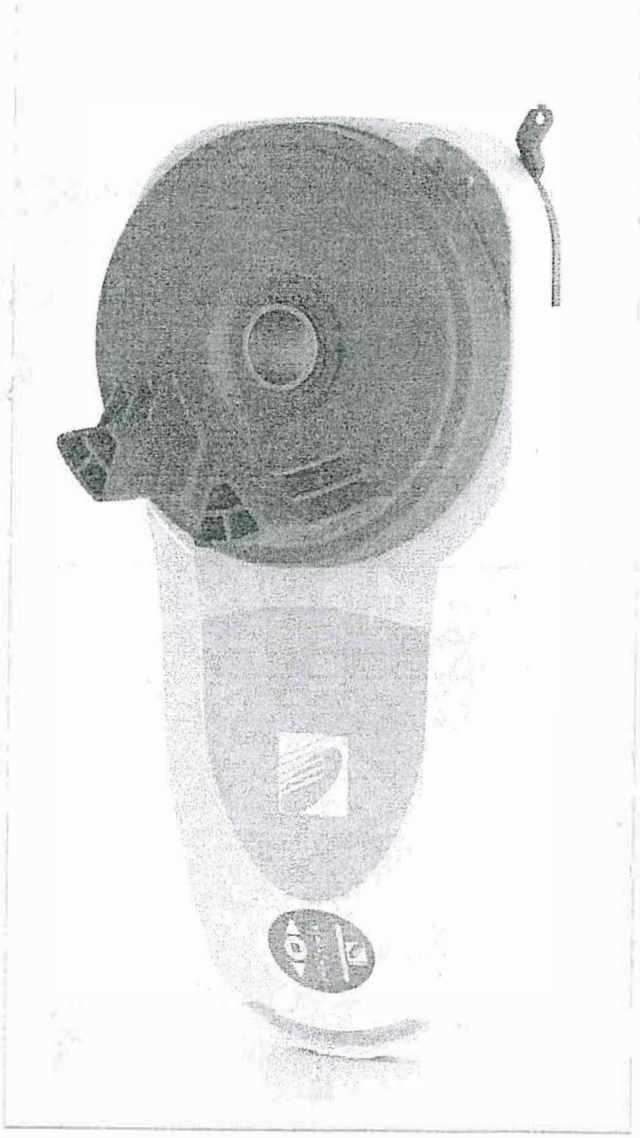

Installation Instructions and

Glidermatic GRD+ Owner's Manual

Glidermatic GRD+ Heavy Duty Automatic Roller Door Operator

IMPORTANT SAFETY INFORMATION - PLEASE READ CAREFULLY

SAFETY INSTRUCTIONS

WARNING! : To reduce the risk of severe injury or death

- Never let children operate or play with the doors controls
- Keep the remote control away from children
- Always keep the moving door in sight and away from people and objects until it is completely closed.
  NO ONE SHOULD CROSS A MOVING DOOR.
- Do not disengage the door opener to manual operation with children / persons or any other object including motor vehicles within the doorway.
- The Garage door must be well balanced. Sticking or binding doors can falsely trigger the obstruction sensing of the Glidermatic GRD+ Unit.
- **All maintenance should be carried out by suitably qualified personnel.**
- Test the door opener monthly. The garage door MUST reverse on contact with a 40mm high rigid object on the floor. The amount of force the door should encounter is adjustable. Failure to adjust the opener properly may cause severe injury or death.
- The Glidermatic GRD+ Operator has an electronic obstruction system that provides **safe** and reliable operation. It is however a legal requirement in some countries to also install a Photo-electric sensor across the door way, please check this requirement with your local distributor.

Glidermatic GRD+ Drive Assembly (Exploded View)

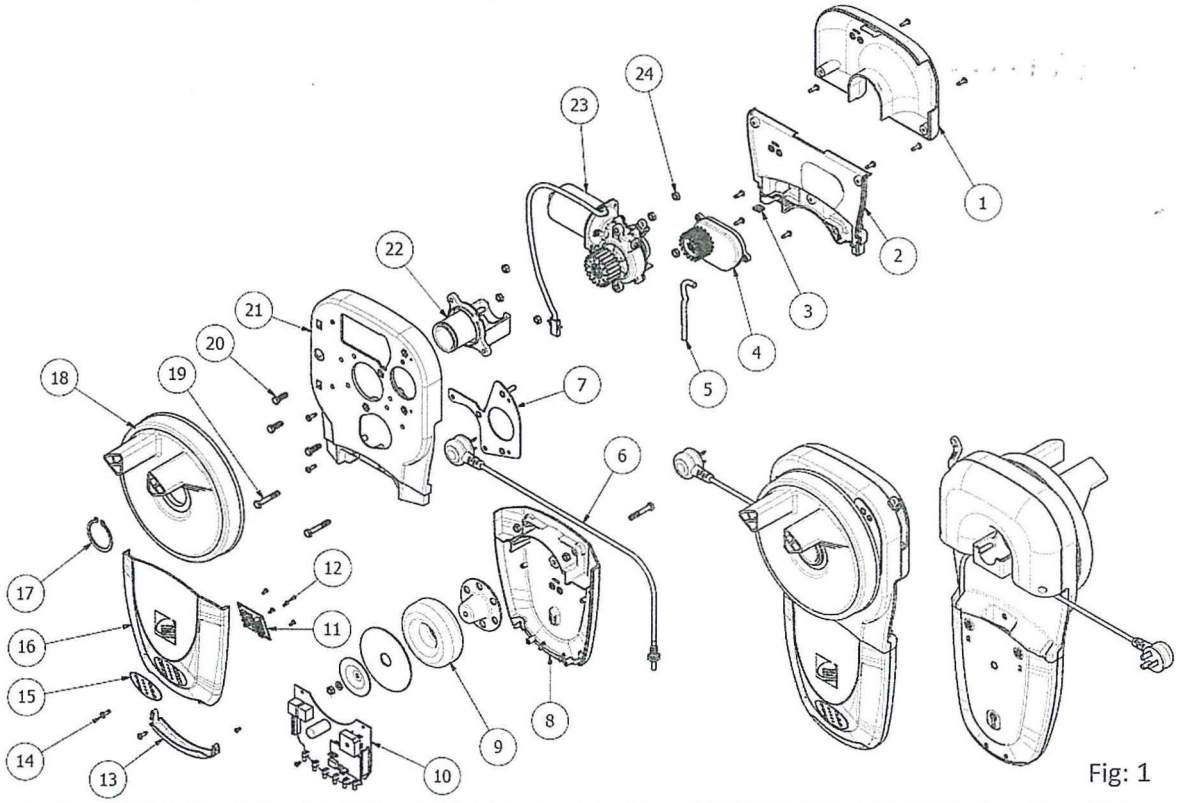

Fig: 1

No.	Part Description	No.	Part Description	No.	Part Description
1	Motor Cover	9	Transformer	17	C-Ring
2	Rear Cover	10	PCB	18	Drive Wheel
3	Rubber Grommet	11	Control Panel PCB	19	Hex Bolt M6*40L
4	Limit Sensor	12	Screw 1/8*1/4L	20	Hex Bolt M6*20L
5	Hall Cable	13	Lens	21	Chassis
6	Power Cable	14	Screw 5/32*1/2L	22	Axle Mounting Bracket
7	Reinforcing Plate	15	Control Panel Label	23	Roller Motor Assembly
8	Control Unit Rear Cover	16	Control Unit Front Cover	24	Hex Nut M6

Installation Instructions

The **GRD+** unit may be retrofitted to any roller doors including non Gliderol doors and also it does not require any disassembly of the door during installation.

The **GRD+** unit may be retrofitted to either side of a roller door. Selection of the desired side may be determined by the available room, location of power and general installation.

In some circumstances the wall bracket may need to be relocated if the distance between the side edge of the bracket and face of the drum wheel is greater than 130mm or less than 70mm (110mm for Gliderol doors drumwheel recessed at 75mm from edge of curtain).

Furthermore the face of the drum wheel should not be recessed more than 75mm from the edge of the curtain.

The door must be in good working conditions, adjustments to spring tension may be required.

These instructions are to be read in conjunction with Roller Door Installation instructions.

Please note:-

THE FOLLOWING INSTRUCTIONS FOR FIXING OF THE DRIVE UNIT ASSEMBLY TO THE DOOR ARE FOR A RIGHT HAND INSTALLATION. *(Refer to Fig 1-8).*

a) Check the door U-bolt is securely tightened on the LEFT hand side of the door.

b) Raise the door and tie a rope around the centre to secure the roll.

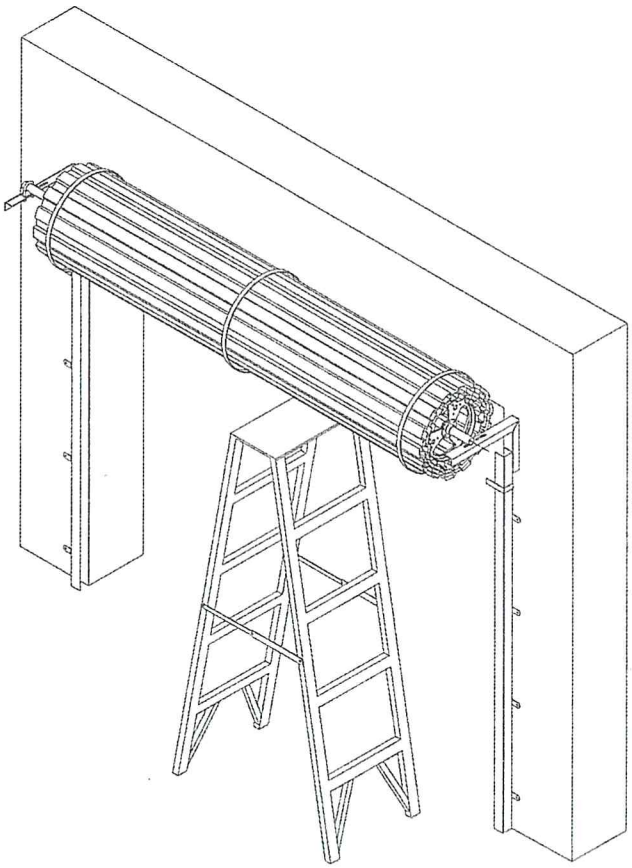

Fig: 2

c) Support the right hand end of the door with a suitable prop, e.g. step ladder and soft padding to protect the door surface *(Fig. 2)*

STOP WARNING: DO NOT ALLOW CHILDREN/PEOPLE AROUND THE DOOR WHEN PROPPED. SERIOUS PERSONAL INJURY AND/OR PROPERTY DAMAGE CAN RESULT FROM FAILURE TO FOLLOW THIS WARNING.

d) Carefully loosen and remove the right hand spindle 'U' bolt

e) Make sure the door supporting prop is secure. While the door is supported remove the right hand wall mount bracket.*(Fig. 3)*

f) Slide the GRD drive unit on to the spindle of the door.

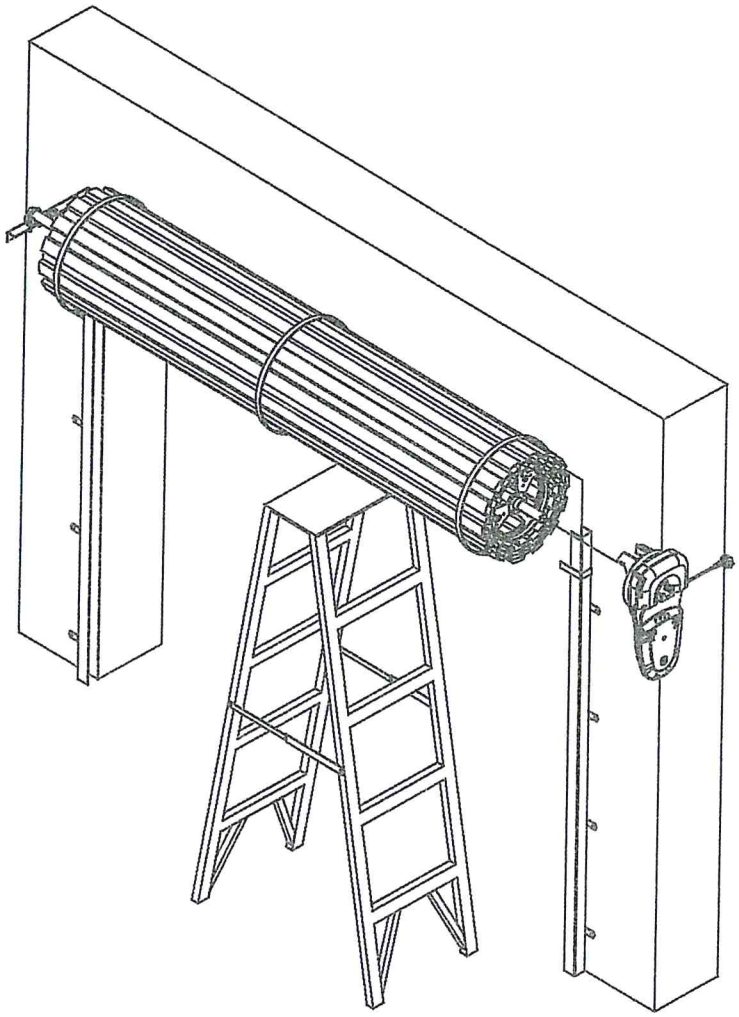

Fig: 3

g) Locate the engaging fork on the drive unit with drum wheel spoke. Please ensure the unit forks are fully engaged into the spoke of the drum wheel.

h) Replace right hand side wall mount bracket *(Fig 4)*

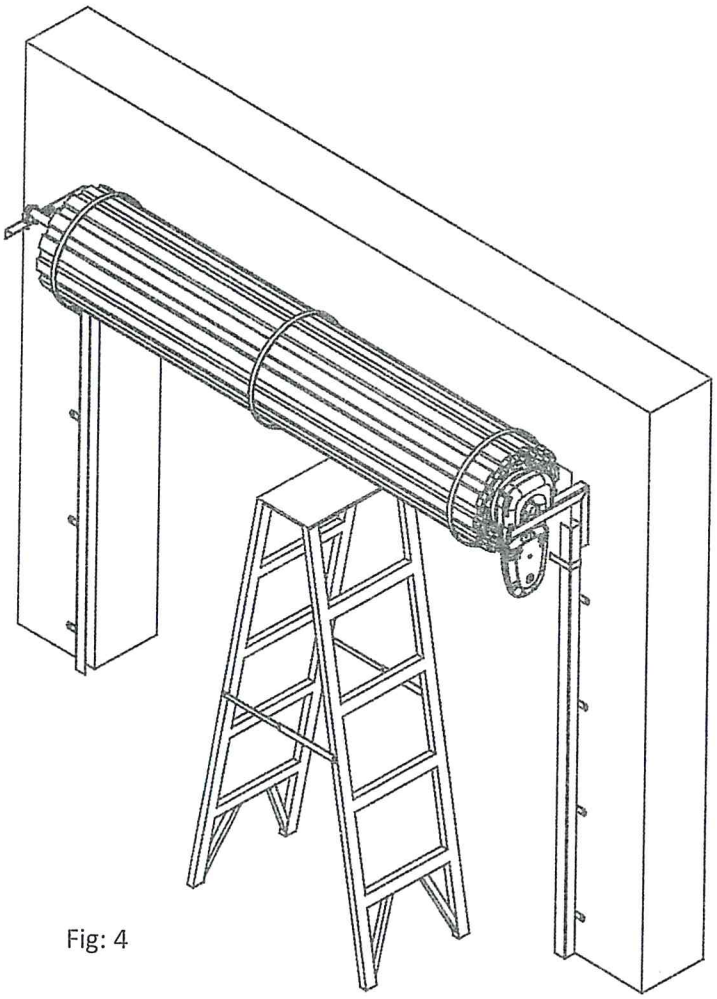

Fig: 4

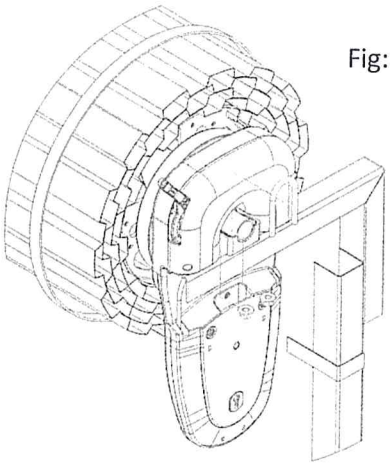

Fig: 4a

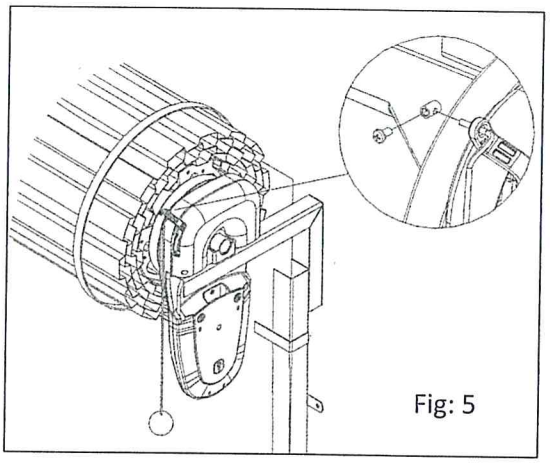

Fig: 5

i) Carefully remove the support from the door and rest spindle on the wall mount bracket

j) Locate the Drive unit on the bracket and fit 'U' bolt provided in the fitting kit. Tighten the 'U' bolt with two nuts provided (Fig 4a).

k) Fit Anti coning collar to the opposite end of the door to avoid sideways movement of the drum wheel.

Alternate Method: On smaller size doors the GRD+ unit may be installed without removing and replacing the bracket. After step (d) carefully lift the roller door from the bracket enabling GRD drive unit to slide on to the spindle of the door. Ensuring the unit's fork is properly engaged with the spoke of drum wheel carefully rest the door on the spindle and follow consecutive steps from (j)

l) Insert manual release cable into the manual release lever in the motor and secure it by tightening the lock screw. *(Fig 5)*

Note: If bracket is in the way of the manual release cable, a small hole may be drilled on the bracket and manual release cable may be fitted by passing it through the bracket hole and then into the manual release lever and secured by lock screw.

m) Locate the weight bar on the centre of the bottom rail and drill two locating holes through the holes on the weight bar into the bottom rail. Secure the weight bar with two bolts provided. *(Fig 6)*

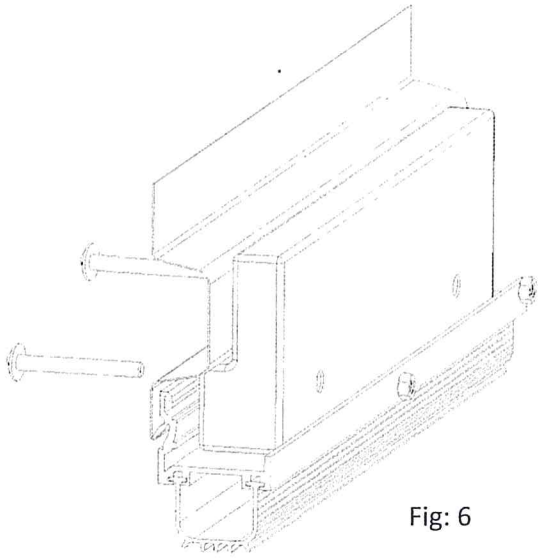

Fig: 6

Security Screw: Fully close the door, mark the corrugation just before the curtain leaves the top roll, drill through the curtain and the drum wheel rim and apply a 'pop rivet' or self-tapping screw. This must be done at both ends of the door (Fig. 7)

NOTE: After marking the flute the curtain may be raised to give access to drilling etc.

WARNING: Care must be exercised when drilling to avoid internal wiring.

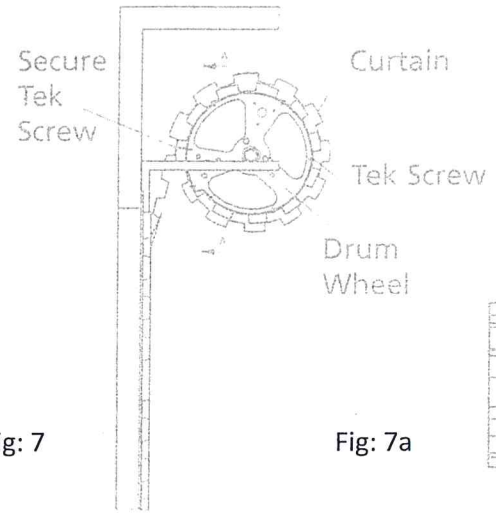

Fig: 7

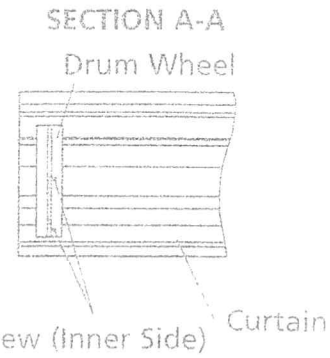

Fig: 7a

IMPORTANT: Security rivet / tek screw must always be applied to inner side of drum wheel as shown in *Fig: 7a*. Failure to do so may result in internal damage to the GRD+ drive unit.

www.garagedoorsonline.co.uk 01926 463888 04/2018

PCB Index

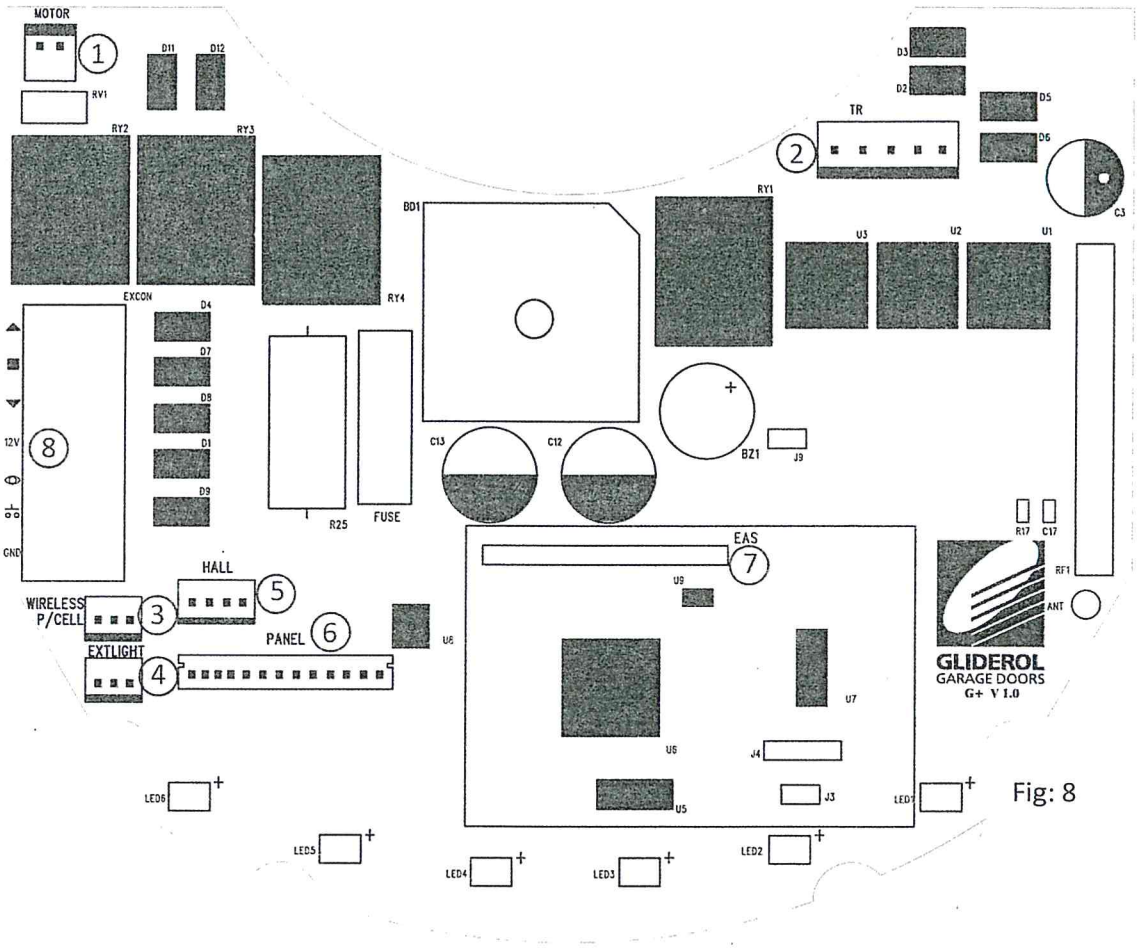

Fig: 8

1	Motor Connector	5	Hall Connector
2	Transformer Connector	6	Control Panel Connector
3	Wireless Photocell Connector	7	EAS Receiver Connector
4	External Light Connector	8	External I/O Terminal ▲ Up Direction ■ Stop ▼ Down Direction **12V** 12 Volt DC output Photocell UP, DOWN, STOP **GND** Ground

User Interface

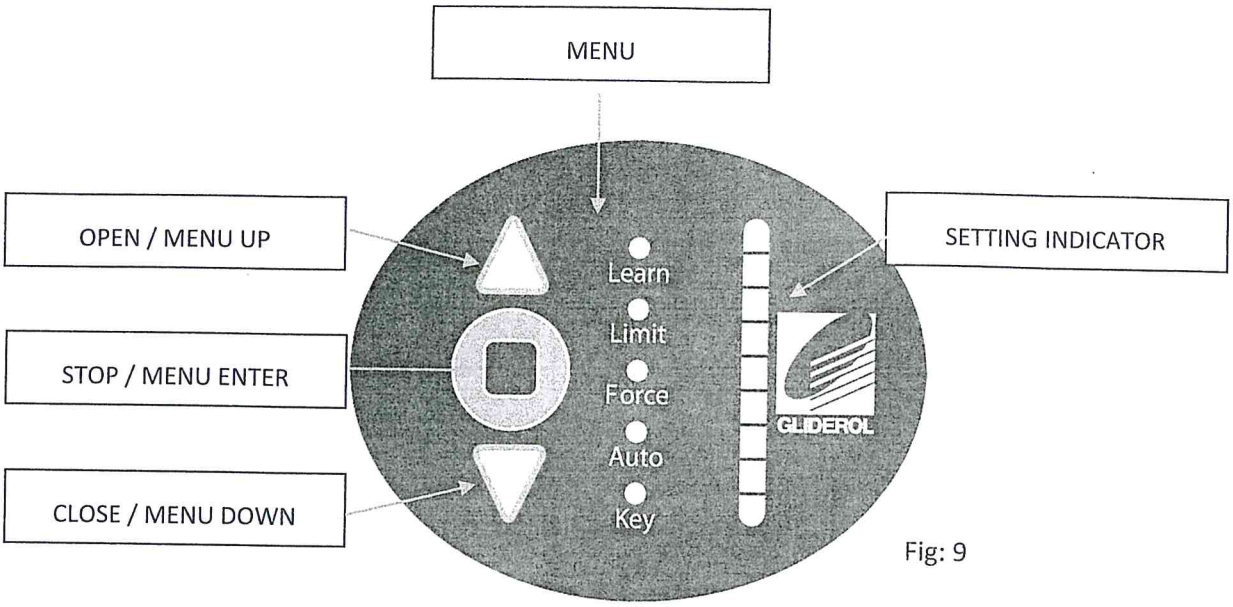

Fig: 9

1.0 Transmitter Coding – By Controller

1. Press and hold [ENTER] for 2 seconds to enter menu selection
2. Using [UP] and [DOWN] to select Learn option, and press [ENTER]

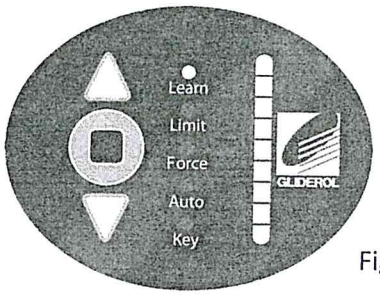

Fig: 10

3. While the [INDICATOR] is lit, press the desired operation key on transmitter
4. A beep will signal for successful coding. Two beeps signal for a transmitter already in memory
5. Unit will automatically exit the setup after 3 seconds

1.1 Transmitter Coding – By Transmitter

1. Using an already programmed transmitter, press and hold OPEN & STOP keys simultaneously for 2 seconds
2. Unit will beep three times to signal for Learn Mode
3. Press the desired operation key on the new transmitter
4. A beep will signal for successful coding. Two beeps signal for a transmitter already in memory
5. Unit will automatically exit the setup after 3 seconds

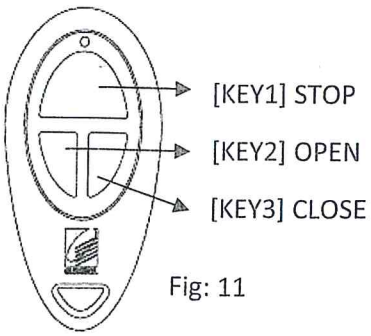

Fig: 11

www.garagedoorsonline.co.uk 01926 463888 04/2018

2.0 Transmitter Key Setting

1. Press and hold [ENTER] for 2 seconds to enter menu selection
2. Using [UP] and [DOWN] to select Key option, and press [ENTER]
3. [INDICATOR] will lit to show current key configuration
4. Using [UP] and [DOWN], select the desire transmitter key setting from the below options

Single Button Configuration: Any one of the three buttons in the transmitter can be used to control all three functions Stop/Open/Close. Useful when one transmitter can operate more than one door and a maximum of three doors.

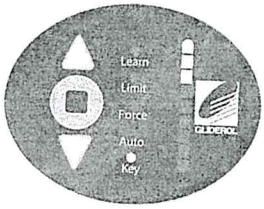

KEY 2

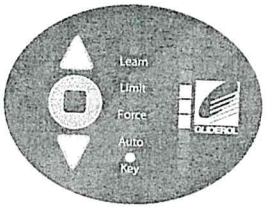

KEY 1

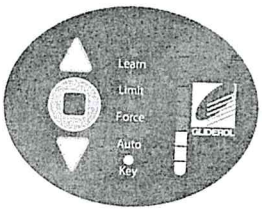

KEY 3

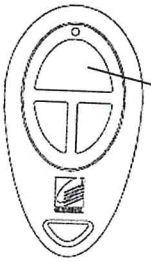

[KEY1]
Stop/Open/Close

Three Button Configuration: Each buttons in the transmitter can be used to control individual functions like functions Stop/Open/Close of the same door.

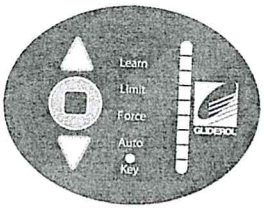

OPEN / STOP / CLOSE

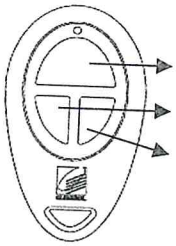

[KEY1] STOP
[KEY2] OPEN
[KEY3] CLOSE

5. Press [ENTER] to confirm selection, and a beep will signal for successful setup.

3.0 Transmitter Code Erase

1. Press and hold [ENTER] for 2 seconds to enter menu selection
2. Using [UP] and [DOWN] to select Learn option
3. To erase all transmitter code in memory, press and hold [ENTER] for 5 seconds
4. When [INDICATOR] diminishes, all codes have been erased

4.0 Limit Setting – By Controller

1. Press and hold [ENTER] for 2 seconds to enter menu selection
2. Using [UP] and [DOWN] to select Limit option
3. To initiate door limit setting, and press [ENTER]
4. [INDICATOR] will lit to show current drive handing
5. Using [UP] and [DOWN], select the desire drive handing

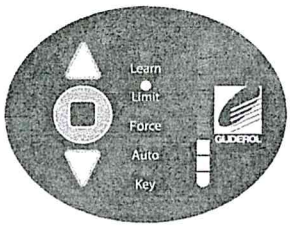

Left Hand Drive

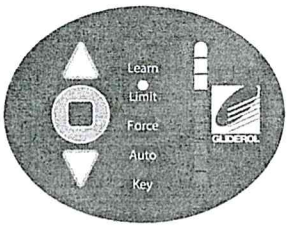

Right Hand Drive

6. Press [ENTER] to confirm selection, and door will begin to close to find floor position. Upon reaching the floor, the unit will beep 3 times to confirm.
7. Proceed to setup the TOP limit, by using transmitter's OPEN & CLOSE keys, and confirm TOP limit position by pressing STOP key
8. Then set the BOTTOM limit, also by using transmitter's OPEN & CLOSE keys, and confirm BOTTOM limit position by pressing STOP key
9. Once limits are set, the unit will automatically perform a full calibration cycle
10. When the door is closed after calibration, the limits are successfully setup

4. 1 Limit Resetting – By Transmitter

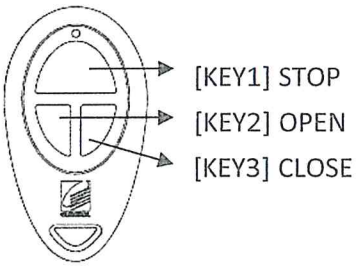

1. Using an already programmed transmitter, press and hold OPEN & CLOSE keys simultaneously for 10 seconds
2. Door will begin to close to find floor position, and upon reaching the floor, the unit will beep 3 times to confirm.
3. Proceed to setup the TOP limit, by using transmitter's OPEN & CLOSE keys, and confirm TOP limit position by pressing STOP key
4. Then set the BOTTOM limit, also by using transmitter's OPEN & CLOSE keys, and confirm BOTTOM limit position by pressing STOP key
5. Once limits are set, the unit will automatically perform a full calibration cycle
6. When the door is closed after calibration, the limits are successfully setup

Important Note: In the event of power failure and power resumed or GRD+ unit switched OFF and switched back ON or Manual release chord operated, the GRD+ operator will perform an "AUTO LIMIT RESET CYCLE" by which the door will only CLOSE upon pressing the remote button / CLOSE button on control panel to find the floor (OPEN function is disabled until the limit reset cycle is completed. From the next cycle the door travel limits are restored and door will operate as normal.

5.0 Force Setting

1. Press and hold [ENTER] for 2 seconds to enter menu selection
2. Using [UP] and [DOWN] to select Force option, and press [ENTER]
3. [INDICATOR] will lit to show current force configuration

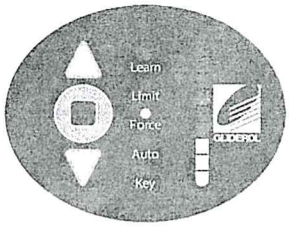

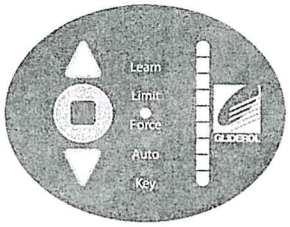

Increase – Low Sensitivity

↕

Decrease – High Sensitivity

4. Using [UP] and [DOWN], to adjust the force in the above manner
5. Press [ENTER] to confirm selection, and a beep will signal for successful setup

---

6.0 Automatic Closing Setting

1. Press and hold [ENTER] for 2 seconds to enter menu selection
2. Using [UP] and [DOWN] to select Auto option, and press [ENTER]
3. [INDICATOR] will lit to show current configuration

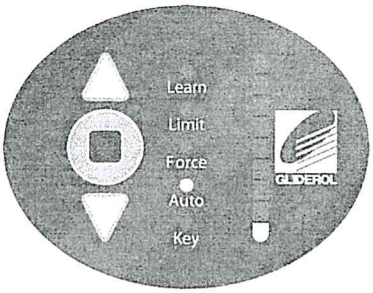

Note: If Auto Close is enabled it is important to fit an auxiliary safety device like Photo beams to avoid human entrapment or door accidently hitting any object.

4. Using [UP] and [DOWN], to adjust the automatic closing setting in the below manner

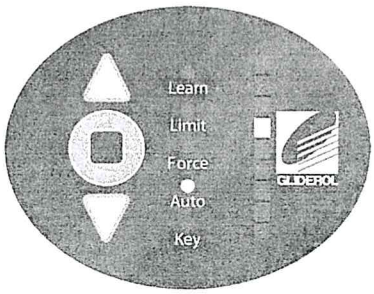

Above shows a setting for 50s automatic closing

80s
70s
60s
50s
40s
30s
20s
10s
OFF

Disabling Auto Close: To Disable Auto Close function follow the above steps 1 & 2 and press the down arrow until the LED indicator moves to OFF position as shown in the table and press [Enter] (middle Button) to confirm selection.

5. Press [ENTER] to confirm selection, and a beep will signal for successful setup.

Please note the Auto-close time delay will only start once the door is fully opened.
If for some reason the door has to be left opened for longer period, press the stop button before the door reaches the fully open position by this the Auto close function will not be activated.

7.0 LED Control

Under 3 Keys transmitter mode, the LED can be switched on and off using the STOP key. This will also output to the EXTLIGHT terminal on-board.

8.0 Vacation Mode

Transmitter signal can be locked out by pressing STOP & CLOSE keys simultaneously and holding it for 3 seconds on the transmitter. To deactivate, press the same keys again and hold it for 3 seconds.

9.0 Key Ring Transmitter

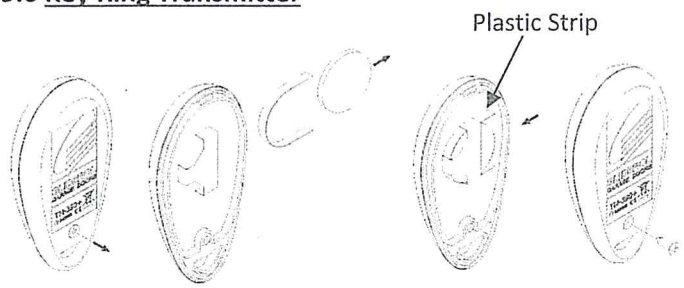

Battery Type 3V CR2016x2 (Lithium Cell)

To replace batteries:

1. Remove the screw on the back case.
2. Replace the old batteries with new ones (3V CR2016x2) and ensure plastic strip remain intact in clip.
3. Locate back of case and secure with screw.

www.garagedoorsonline.co.uk 01926 463888 04/2018

10.0 Photo Sensor Connection Diagram

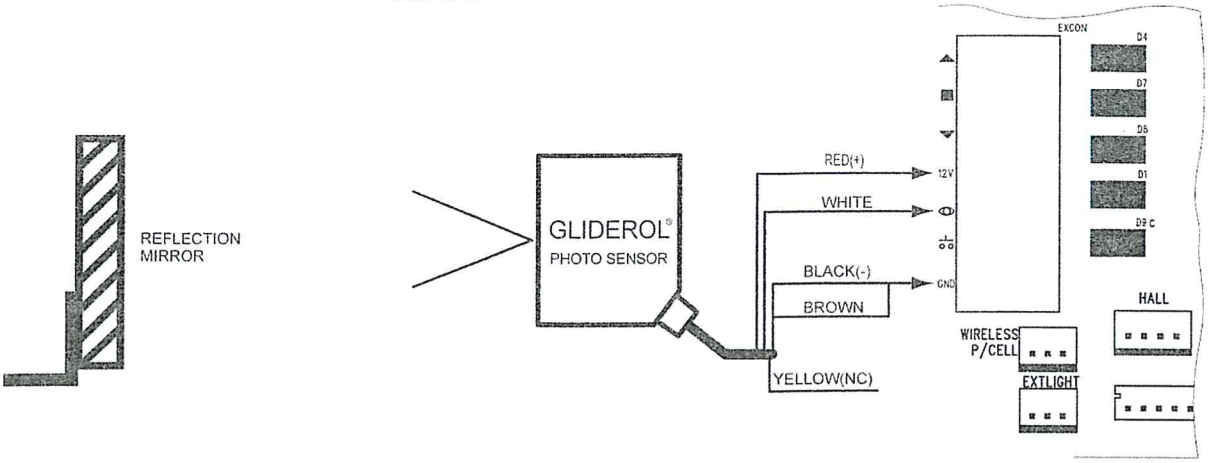

11.0 External Wall Switch Connection Diagram

One Button Switch

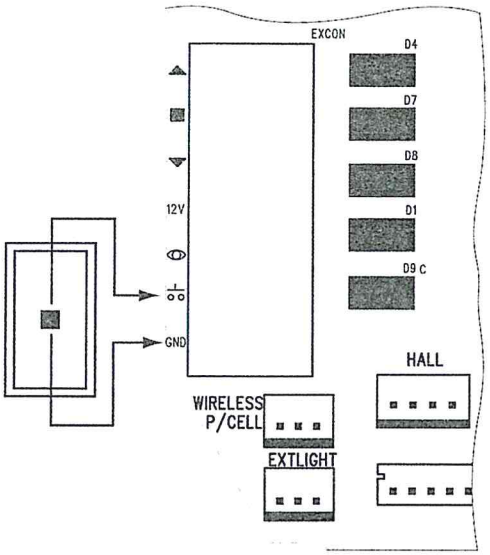

Three Button Switch

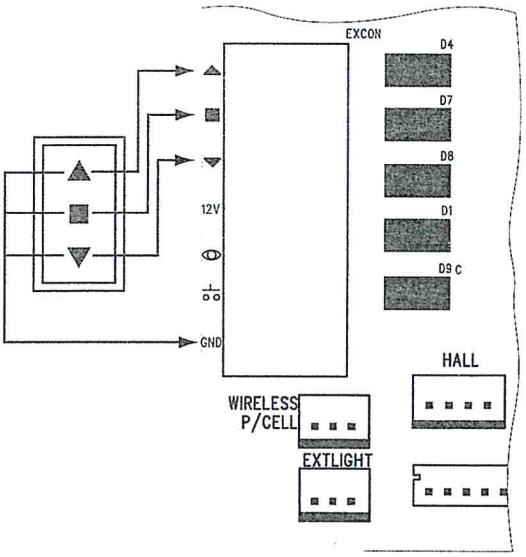

12.0 External Light Connection Diagram *(Optional Interface Board Required)*

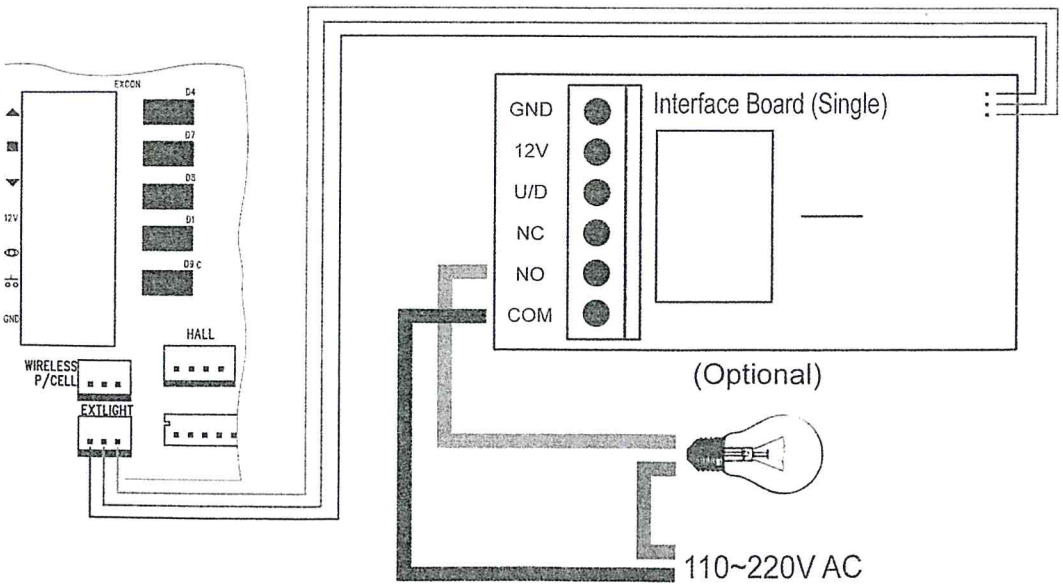

Owner's Manual for the GRD+ Heavy Duty Automatic Roller Door Operator

CONGRATULATIONS! On the purchase of your GRD+ Heavy duty Automatic Roller Door Opener

INDEX

	Page		Page
Door Operation	14	Remote Switch	15
Manual Operation	14	Wireless Wall Button Switch	15
Obstruction Detection	14	External Light	15
Vacation Mode	14	Photo Electric Sensor	15
Automatic Closing	14	Operating controls	15
Door Reposition	14	Trouble shooting table	15
Courtesy Light	14	Technical Specifications	16
Audible Buzzer	14	Warranty	18-19
Rolling Code Security	14	Warranty Form	20
Key Ring Handset	14	Sales & Service	20

Door Operation

A roller door equipped with a GRD+ opener may be operated by any of the following three methods:-

a. By using the handheld Transmitter
b. By pressing the push button on the Operator. (Refer to user interface diagram on page-8.)
c. By an alternative bell press button, remotely hard wired or Wireless wall button mounted (optional).

Momentary activation of either of the above methods will activate the door to open or close.

The door can be stopped at any point during travel by a second activation of (a, b, or c). The following activation will move the door in the opposite direction.

! WARNING - Ensure that the Centre Lift Lock is not engaged when the Drive Unit is in the automatic position.

Manual Operation

In the case of a power failure the GRD+ operator has an easily accessible manual release chord. Pulling the manual release chord once will set the door for manual operation and pulling it again will set the door for electric operation.(please refer to important note on page-10)

Obstruction Detection

During an open cycle if an obstruction is detected, the door will stop. During a closing cycle if an obstruction is detected, the door will reverse to the open position. The sensitivity or the amount force required to cause obstruction detection is fully adjustable (refer to 5.0 Force setting on page-11) for force adjustment.

Vacation Mode

When the door is not used for a long time or during vacation it can be set to vacation mode for security purposes. To activate & deactivate vacation mode refer to 8.0 on page-12.

Automatic Closing

The GRD+ opener can be programmed to automatically close from 10 to 80 seconds after the door has been opened (refer to 6.0 on page-11) to activate and deactivate Auto- Close function.

Door Reposition

During a power failure after power recovery or if the manual mode in engaged and disengaged in the next operation the door will only move in down position to locate the floor and the top limit is automatically set (please refer to important note on page-10). The unit will then proceed with the given operational command.

Courtesy Light

An internal courtesy LED light is housed within the control box enclosure. This is activated during an open or close cycle and will stay illuminated for approximately 60 seconds.

Audible Buzzer

The GRD+ has an internal Piezo Siren that will beep momentarily each time the door is activated by factory default it will be enabled.

This function can be disabled if required to disable remove jumper 'j9' next to buzzer 'Bz1' refer to PCB index diagram on page-7.

Rolling Code Security

The transmitter and receiver incorporate the latest state of the art encryption technology.

This allows the coded transmission to change after each operation with literally billions of unique combinations.

Each GRD+ opener has the facility to store up to 15 individual handsets.

Key Ring Handset

The hand transmitter is manufactured using the latest surface mount technology and incorporates 3 functional buttons. This enables the user to remotely control up to 3 separate operators from the one handset or configure each button to operate OPEN / CLOSE / STOP functions.

Remote Switch
A simple Bell Press type momentary switch can be hard wired directly to the control board.

Wireless wall Button Switch
A wireless wall button, single or three buttons can be mounted on the wall to operate the door.

External Light
With the installation of a small accessory board, the GRD+ Controller can switch the mains light ON this option will allow the connection of auxiliary lighting, i.e. drive way lighting, internal garage lights etc. The external light will be ON for the same amount of time as the courtesy LED light which is approximately 60 seconds. *(Refer to 12.0 on page 13 for wiring diagram)*

NB: Max. Load 100W

! WARNING - All mains lighting must be fitted by a qualified Electrician / Personnel.

Photo-electric sensor
The GRD+ roller door operator includes an interface for the connection of a photo-beam sensor. When fitted, during door closing if the photo sensor has been triggered the door will auto reverse with continuous beep sound. The Photo-beam sensor can be supplied as an accessory option. *(Refer to 10.0 on page 13 for wiring diagram)*

! WARNING - In some countries it is a legal requirement to fit Photo-cell sensors. Please check with your local distributor

OPERATING CONTROLS
The door can be operated by pressing the buttons on the control panel in the drive unit. Refer to figure-9 User interface on page 8 pressing the Up button opens the door, pressing the Stop button stops the door in any position and pressing the down button closes the door.

External Connections: Refer to the PCB index on page 7 for various external connections available in the GRD+ circuit board.

Trouble Shooting

Before you call your local Gliderol agent please check the following Fault Table

SYMPTOM	ACTION
1. Door does not operate.	⇒ Check electrical supply to unit. ⇒ Press handset and/or bell press button again.
2. Drive motor operates but door does not move.	⇒ Manual release may be engaged, pull the manual release chord once to put the drive unit back to electric operation
3. Door auto-reverses after closing fully.	⇒ The door should not stop by striking the ground; reset the door travel limits by limit learning *(page 10)*.
4. Door stalls at fully open position and continues to try to open the door if button is pressed again.	⇒ The door has lost its limits, it should not stop by striking the top guide stop; reset the door travel limits by limit learning *(page 10)*.
5. Door open and closed positions incorrect (Stop short)	⇒ The door has lost its limits (top limit and bottom limit). Reset the door travel limits by limit learning *(page 10)*.
6. Courtesy light comes on but door does not move	⇒ Manual release may be engaged, pull the manual release chord once to put the drive unit back to electric operation
7. Handset range diminishes.	⇒ Replace handset battery after 12 months. ⇒ Check position of antenna on unit to ensure it is relatively straight and not adjacent to the power cord.
8. Handset does not open the door.	⇒ Replace handset battery after 6-12 months. ⇒ Check position of antenna on unit to ensure it is relatively straight and not adjacent to the power cord. ⇒ Check that the handset has been programmed to the door *(page 8)*
9. Door auto-reverses before it is closed.	⇒ Check the force sensitivity setting and readjust *(page 11)*. Check the door is not jammed in tracks.
10. Door stops during opening.	⇒ Check the force sensitivity setting and readjust *(page 11)*. Check the door is not jammed in tracks.
11. Door does not operate and the courtesy lamp is not on.	⇒ Check power is switched on. ⇒ Check the fuse on circuit board and replace. ⇒ Check the door is not jammed in tracks.

Technical Specifications

CHARACTERISTICS	SYMBOL	MIN.	TYP.	MAX.	UNIT
Input Voltage		218	240	262	VAC
System Power Dissipation			100		W
Transformer Power			100		VA
Standby Power Consumption			3.5		W
Transformer Output Voltage	TR	21.6	24	26.4	VAC
Work Voltage of Motor	MOTOR	18	24	34	VDC
Noise of Motor	MOTOR			55	dBA
Lamp Power	LED1~LED6			0.36	W
Buzzer Voltage	BZ1		12		VDC
Fuse	FUSE		15		A
Carrier Frequency Range	Handset	389.9	390	390.1	MHz
Modulation	Handset		AM		
Deviation	Handset	100		100	KHz
RF Output Power	Handset			8	uW
Transmitter Battery	Handset		6		VDC
Demodulation Mode	RF1		AM		
Receiver Sensitivity	RF1	-90		-100	dB
Data Rate	RF1		1K		Hz
Operation Temperature		-20	25	85	℃
Output Voltage in circuit board terminal (0.5 amps Max)			12		V

Using G+ Handset (Optional)

Plug-in EAS Receiver

1. Remove the LED lens and two screws

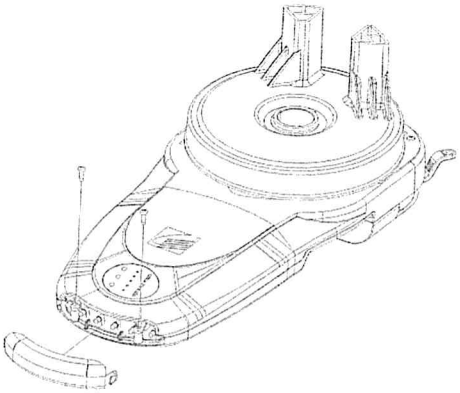

2. Lift up the control panel cover to find the PC board

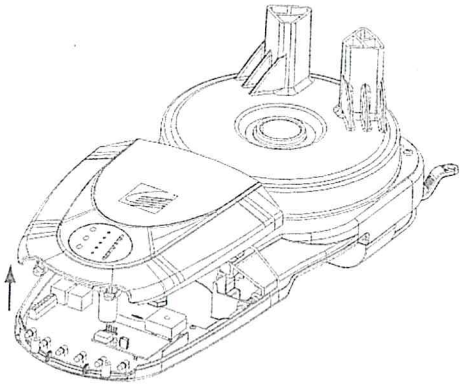

3. Plug the EAS receiver into the EAS receiver sockets properly

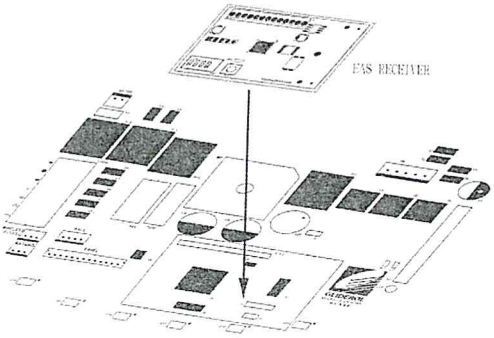

4. Replace control panel cover and LED lens with screws

EAS Receiver Index

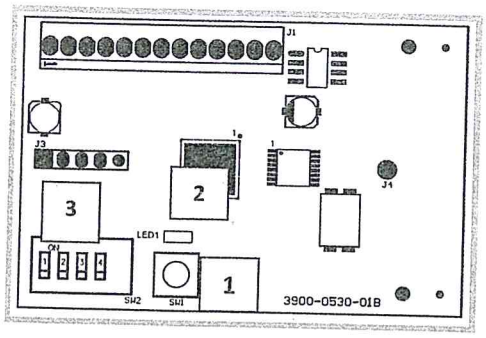

GHI Transmitter Coding

1. Press and hold [1] SW1, until [2] LED blinks twice
2. Press buttons 4&5 simultaneously on the GHI transmitter to code
3. [2] LED will blink twice to confirm successful programming

GHI Transmitter Code Erase

1. Press and hold [1] SW1 continuously, until [2] LED blinks and goes out finally
2. After [2] LED goes out, all codes have been erased.

GHI Transmitter Key Setting

GHI transmitter operation key can be set using [3] SW2, by referring to the below dip switch configuration table

Dip Switch				Key
1	2	3	4	
ON	OFF	OFF	OFF	Button 1
OFF	ON	OFF	OFF	Button 2
ON	ON	OFF	OFF	Button 3
OFF	OFF	ON	OFF	Button 4
ON	OFF	ON	OFF	Button 5
OFF	ON	ON	OFF	Shift + Button 1
ON	ON	ON	OFF	Shift + Button 2
OFF	OFF	OFF	ON	Shift + Button 3
ON	OFF	OFF	ON	Shift + Button 4
OFF	ON	OFF	ON	Shift + Button 5

Premium G+ Key

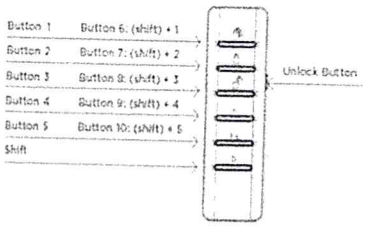
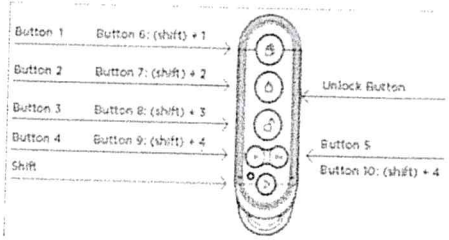
Basic G+ key