SWS UK

SeceuroGlide Sectional Elite
Fitting Instructions

SeceuroGlide | Sectional Elite
Side Mounted System

Apr 2021

Fitter's Information Pack - SeceuroGlide Sectional Elite

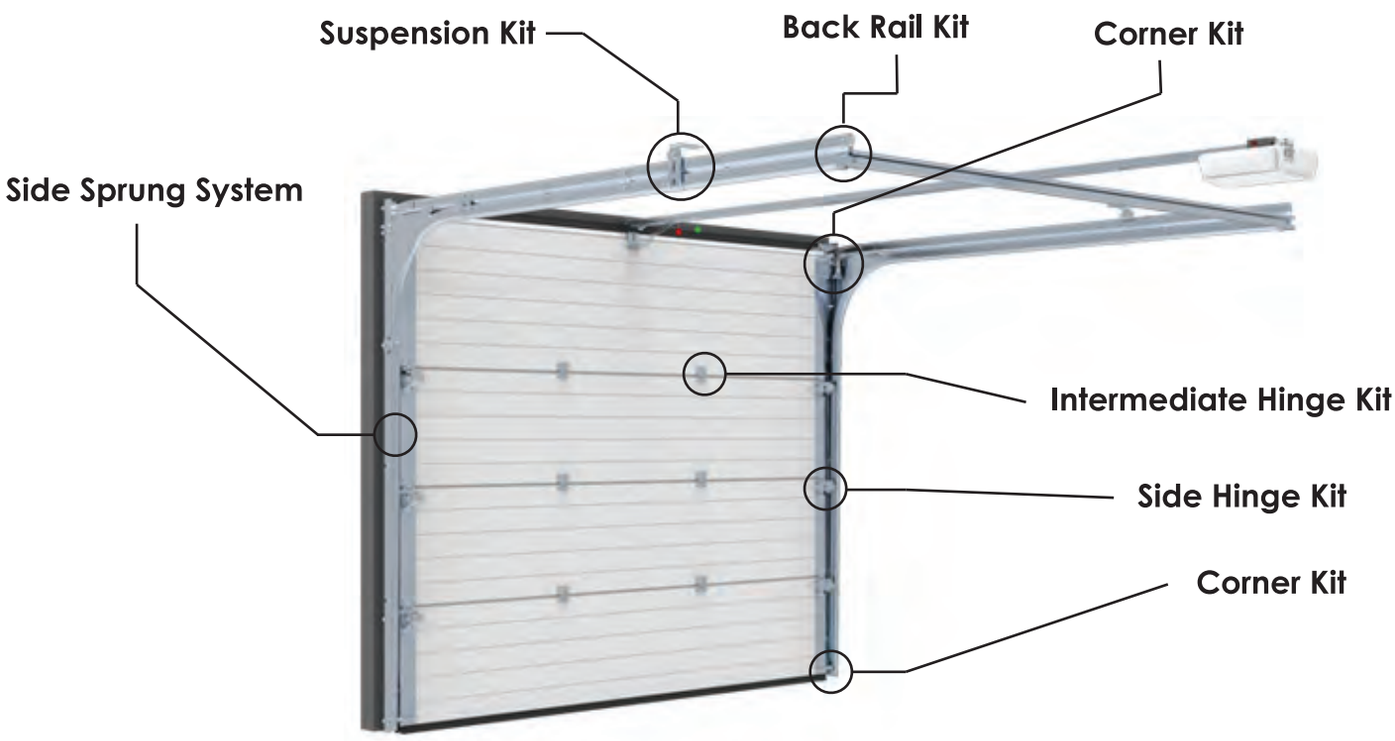

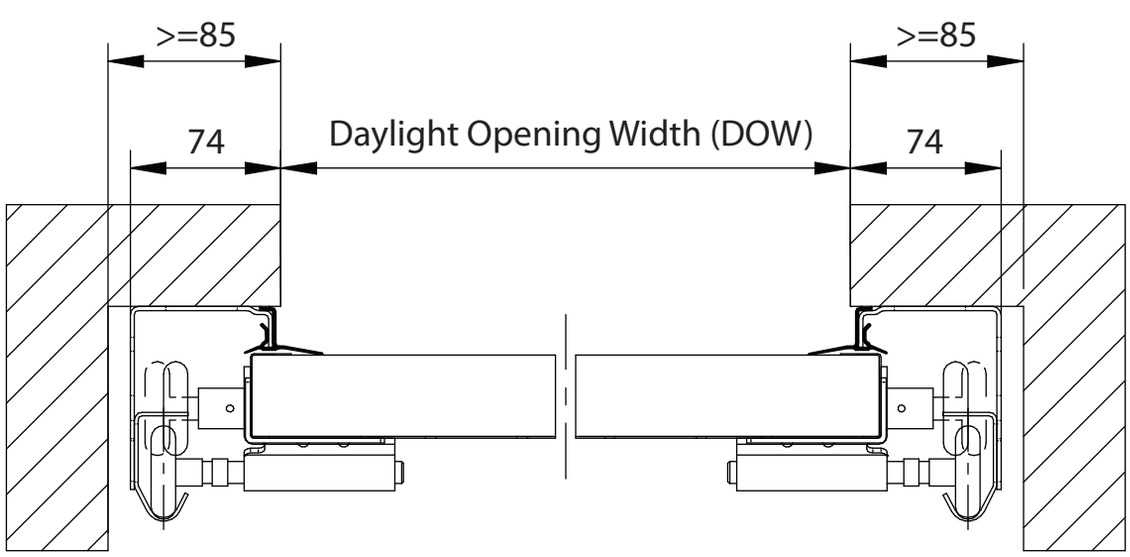

EN 12604
EN 12453
EN 13241

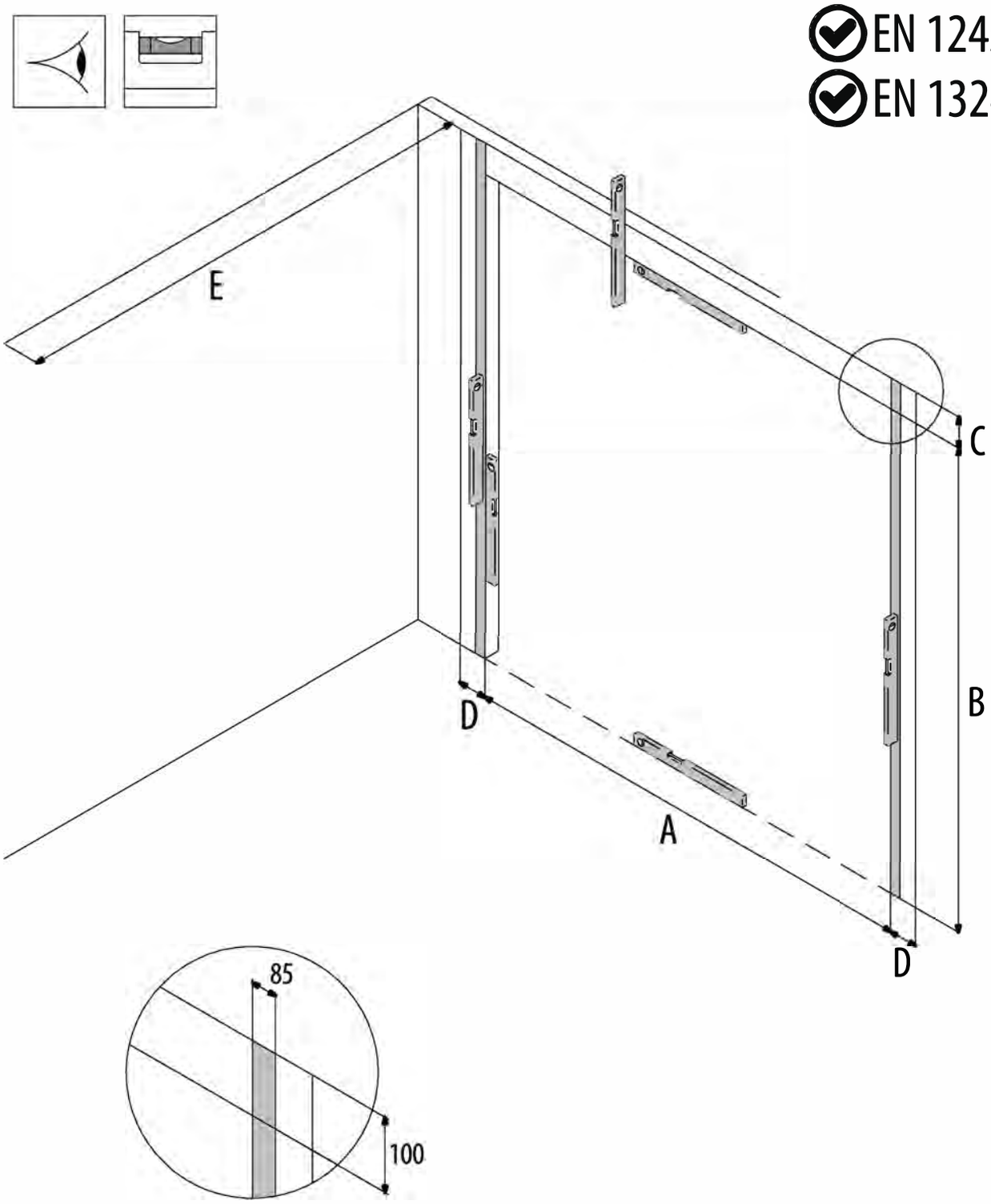

A	B	C	D	E
DLW	**DLH**	**FHR**	**FSR**	**FMD**
Daylight Width	Daylight Height	Free Head Room	Free Side Room	Free Mounting Dept

www.garagedoorsonline.co.uk 01926 463888 www.garagedoorsonline.co.uk

9642

Only remove wing screw after mounting door leaf (without top section).
ATTENTION !!
The springs are pre-tensioned !!

Der Flügelschraube erst nach Torblatt-montage (ohne Obere Sektion) entfernen.
ACHTUNG !!
Die Federn haben Vorspannung !!

Enlever la vis à oreilles une fois le tablier (sans la section haute) monté.
ATTENTION !!
Les ressorts sont pré-tendus !!

Vleugelschroef pas verwijderen na montage deurblad (zonder topsectie).
LET OP !!
De veren zijn voorgespannen !!

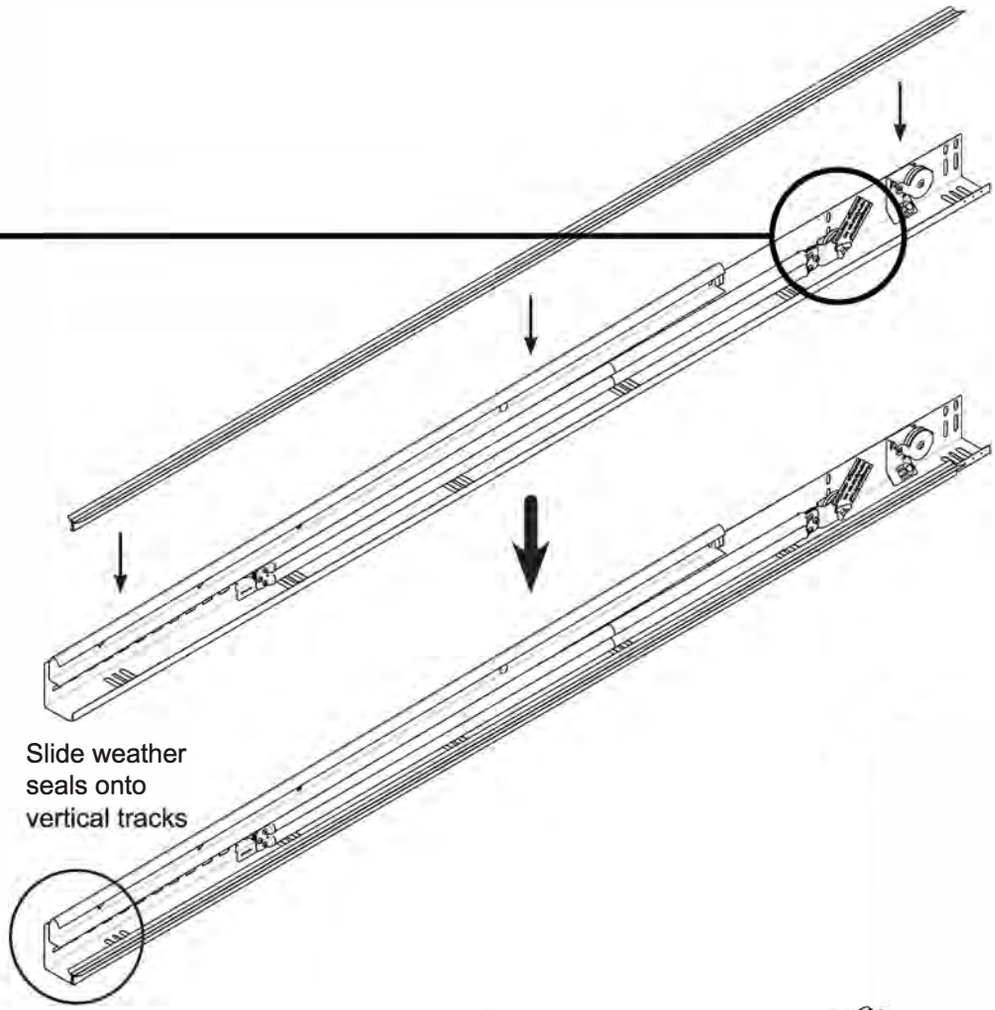

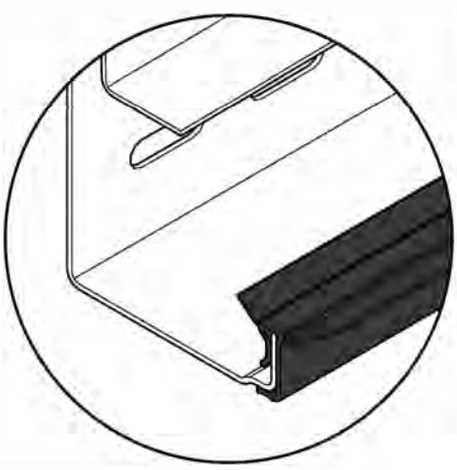

Seals are 100mm larger then needed, cut down to suit the opening

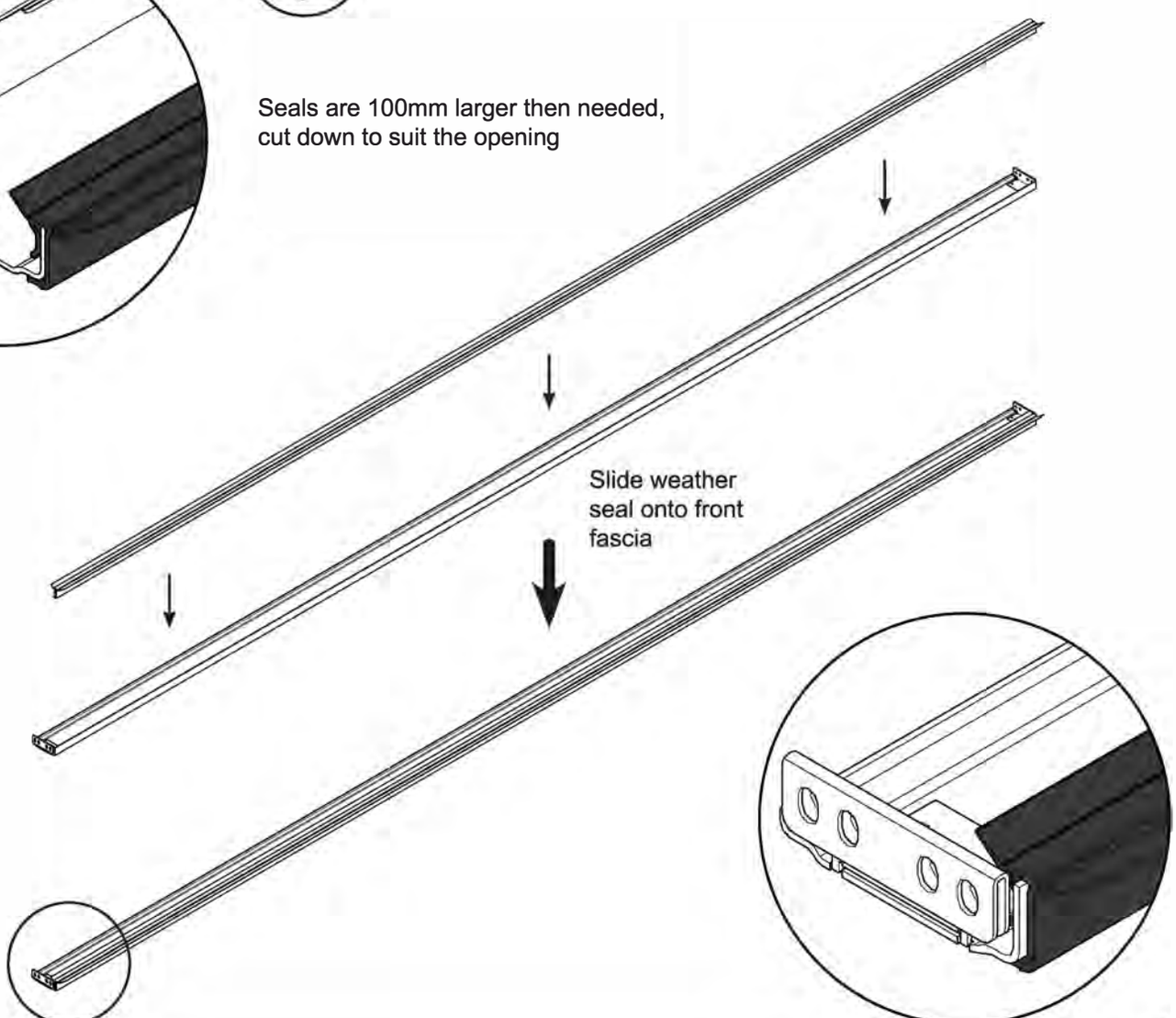

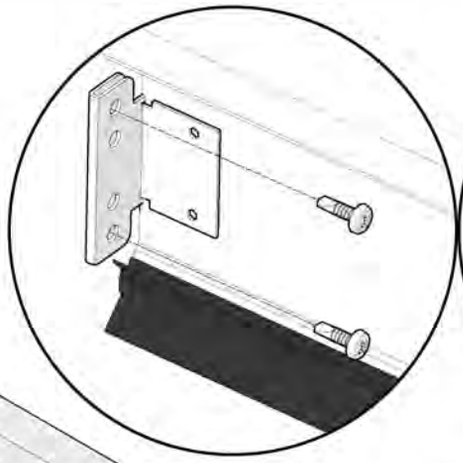

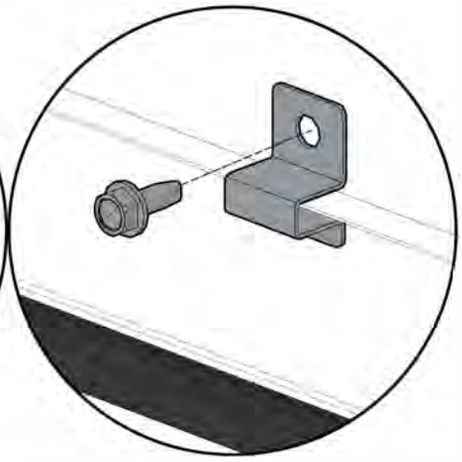

Lift fascia into place and secure

Clamp tracks
to the wall

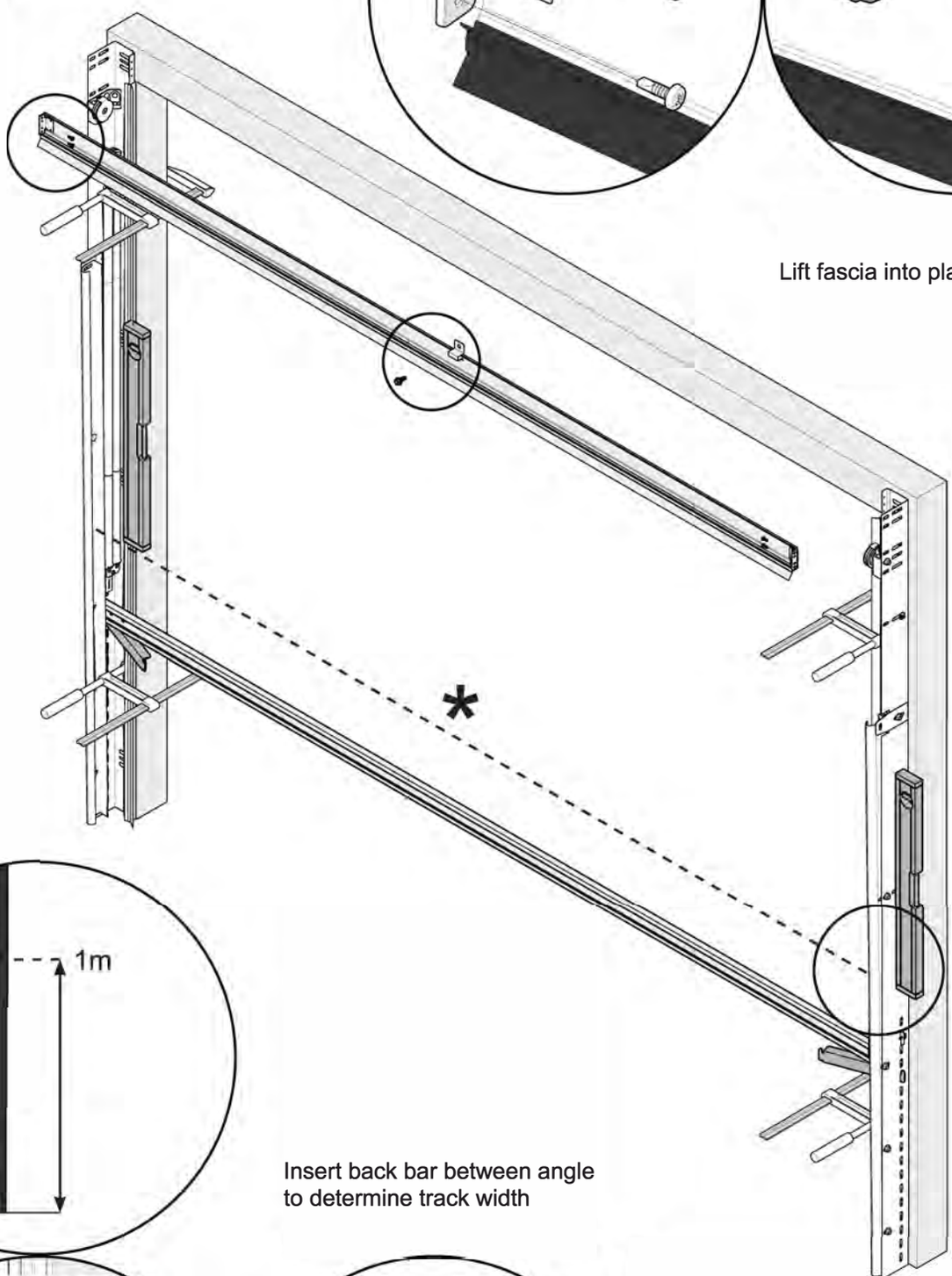

*

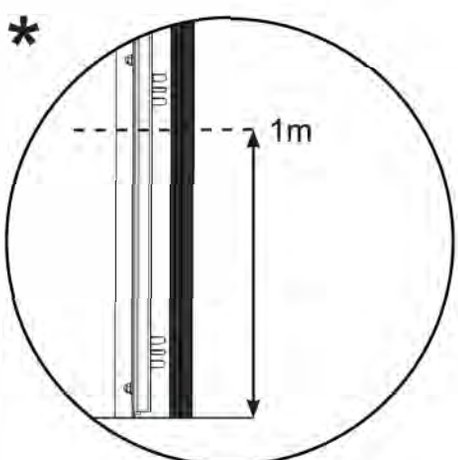

Insert back bar between angle
to determine track width

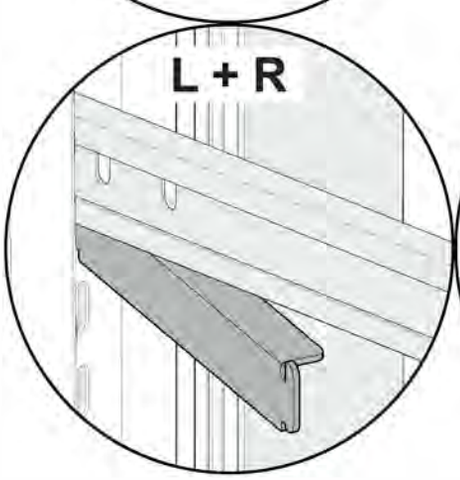

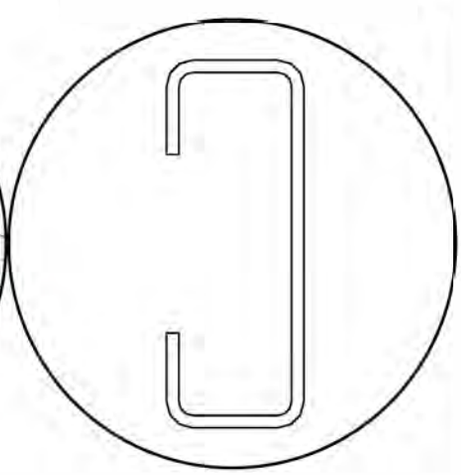

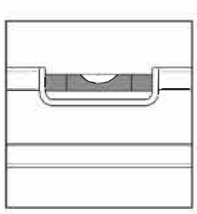

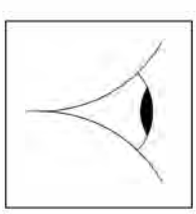

Once the frame is level, secure with the fixings below

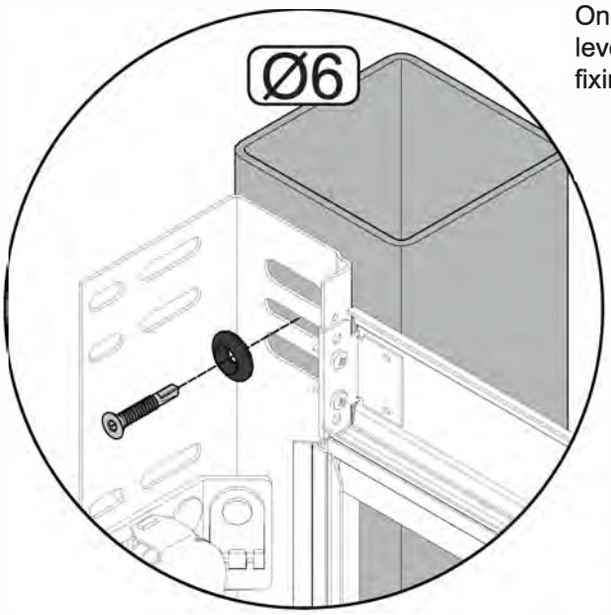

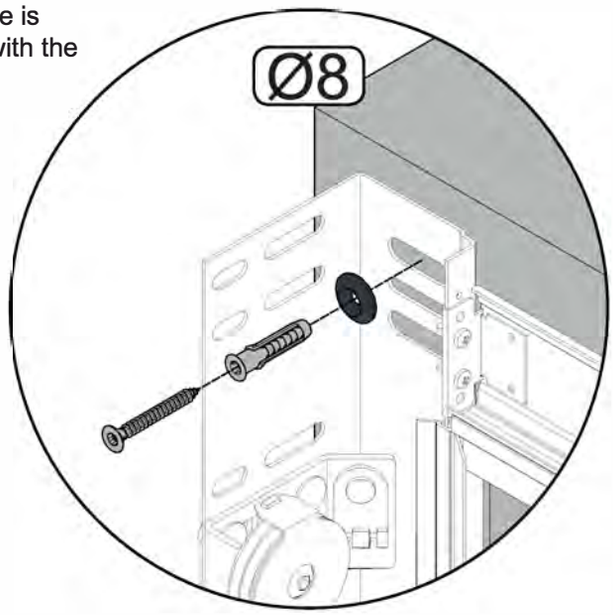

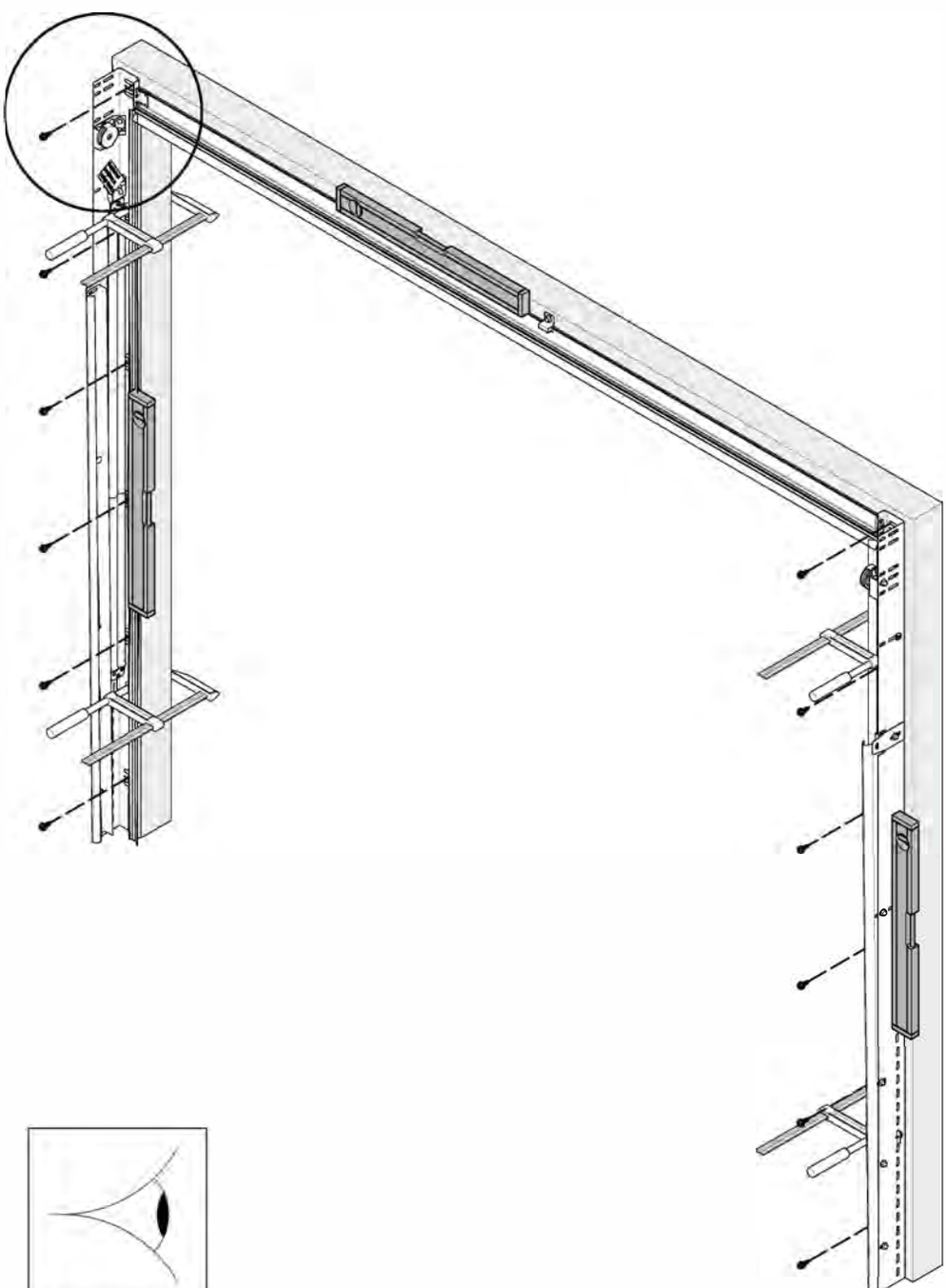

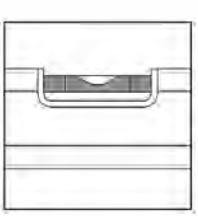

L + R

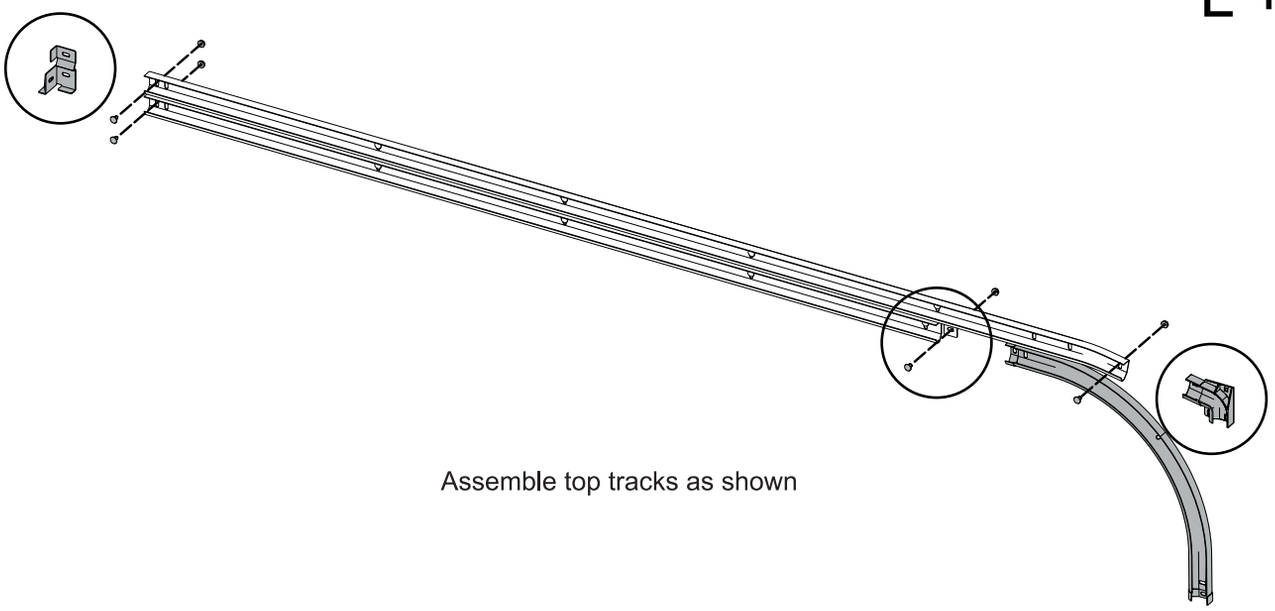

Assemble top tracks as shown

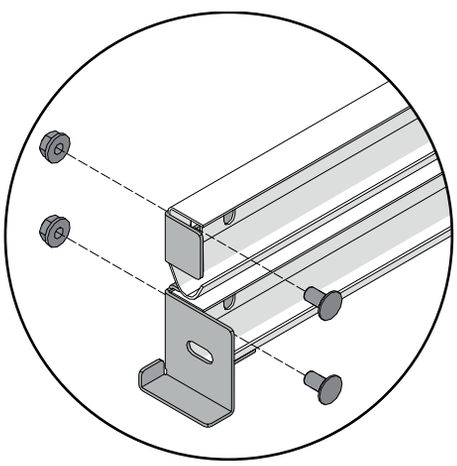

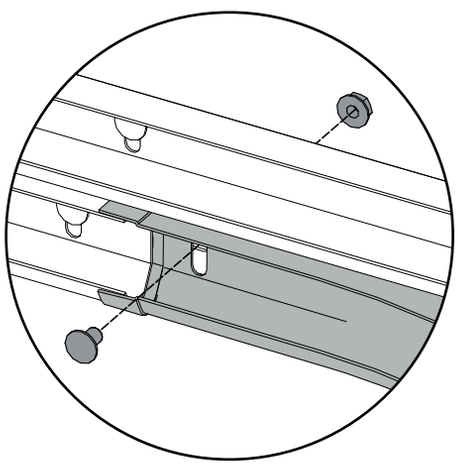

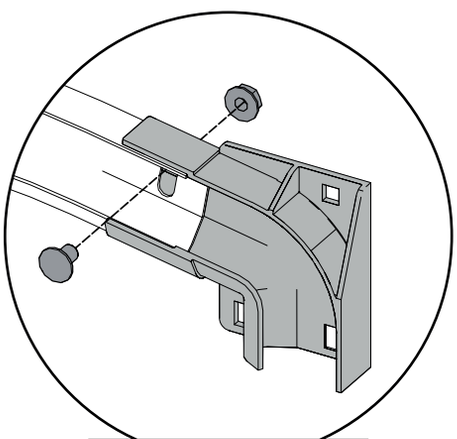

Manual Operation

Assemble horizontal tracks as shown

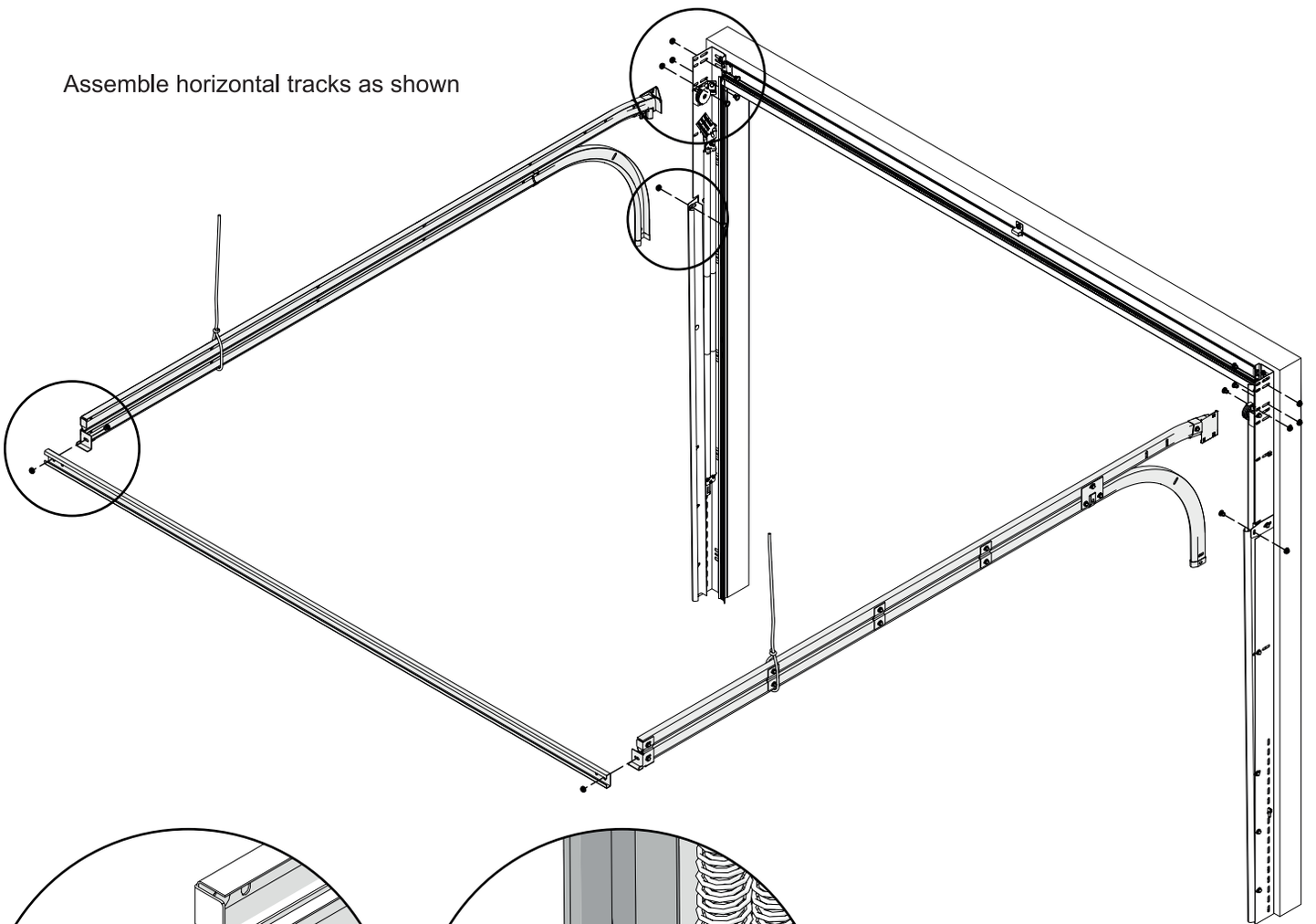

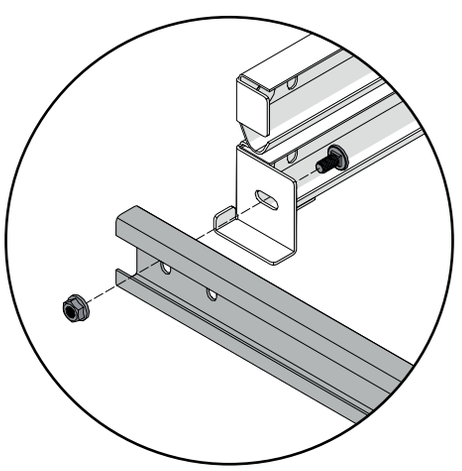

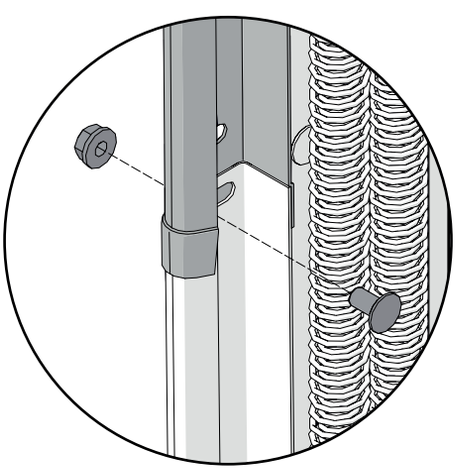

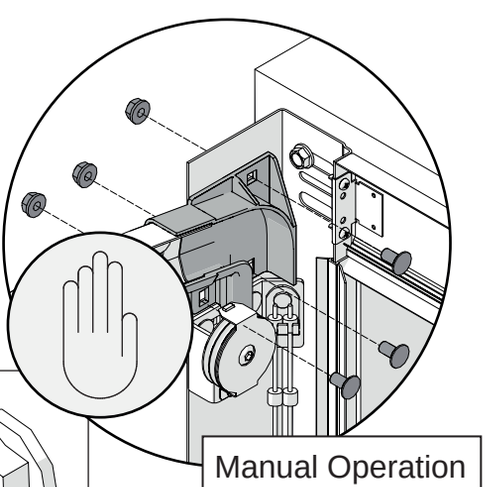

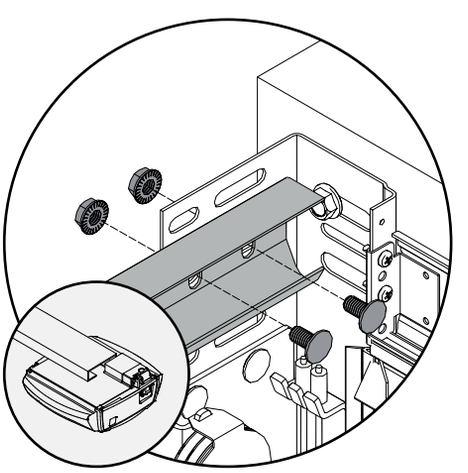

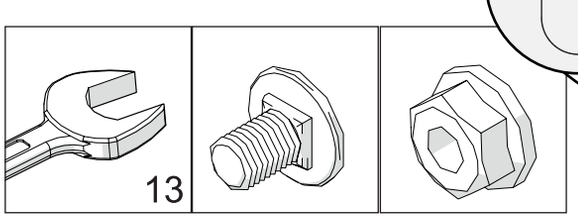

Fit reinforcing plates to horizontal track and radius

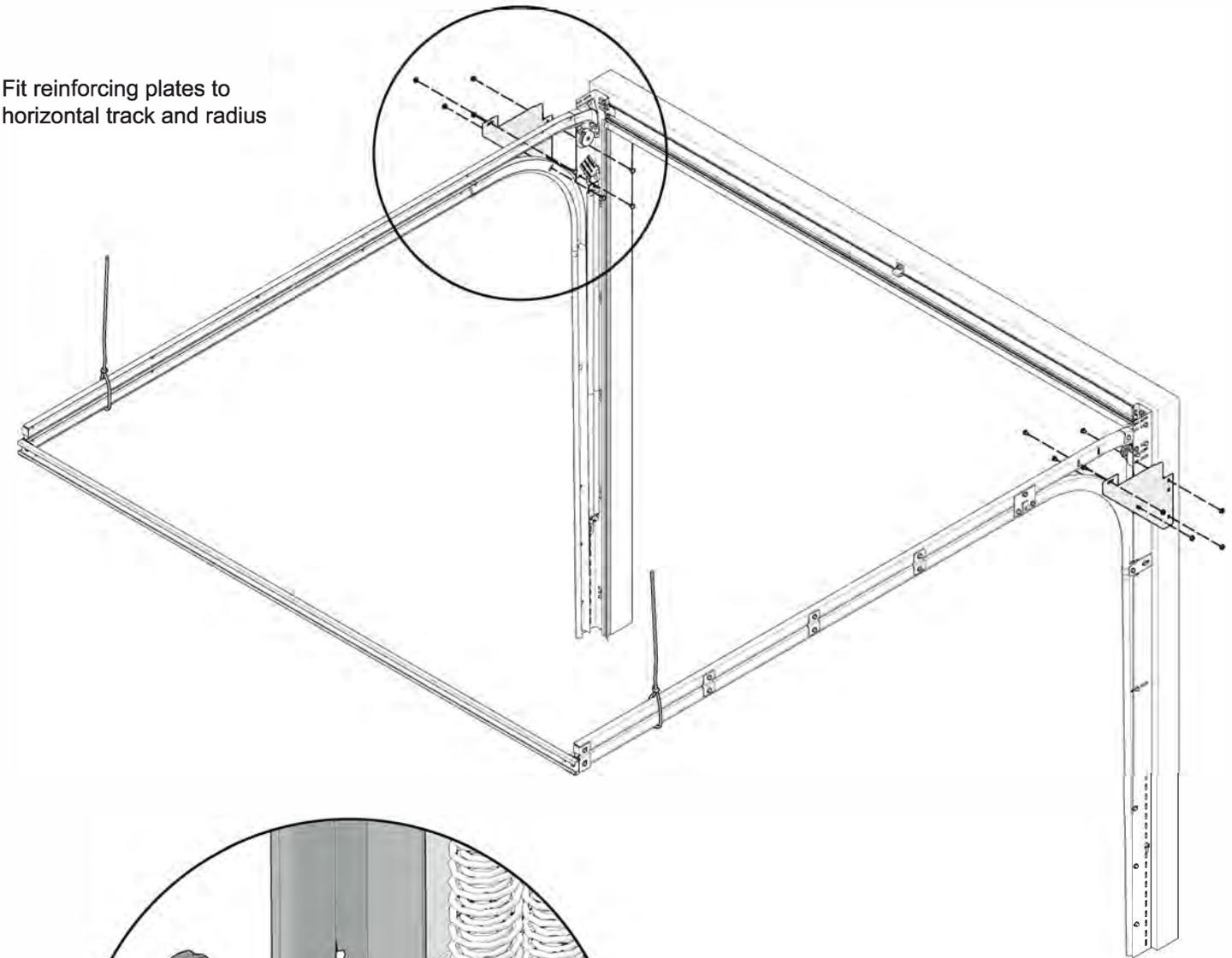

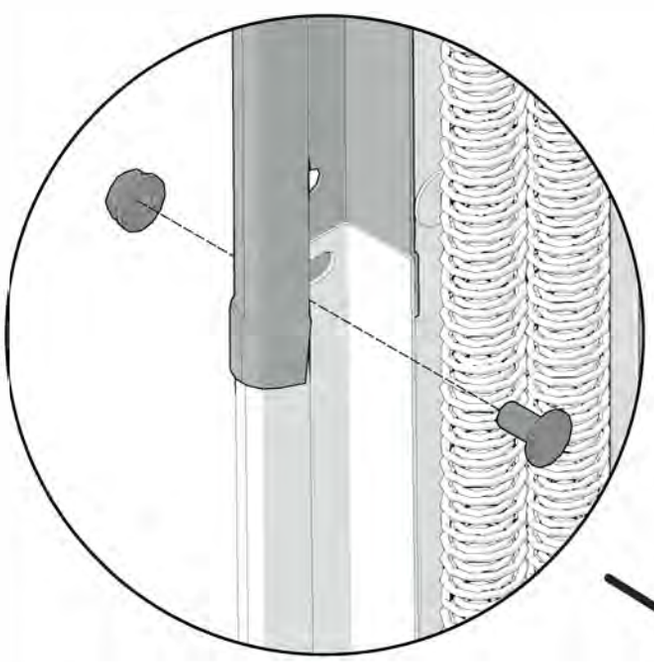

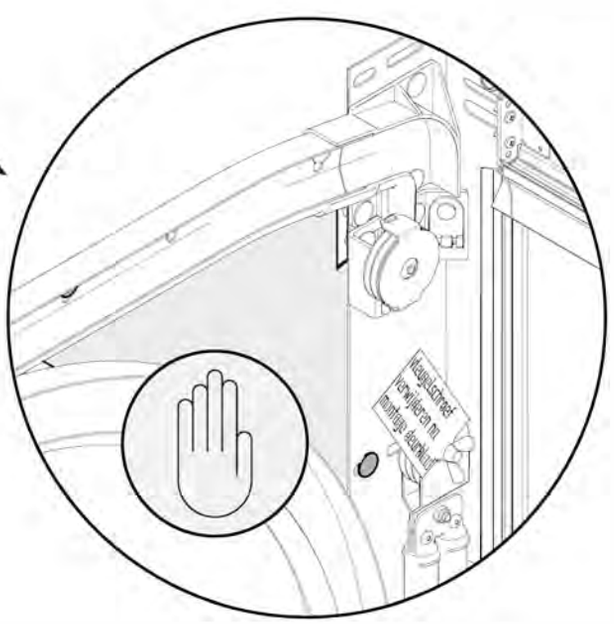

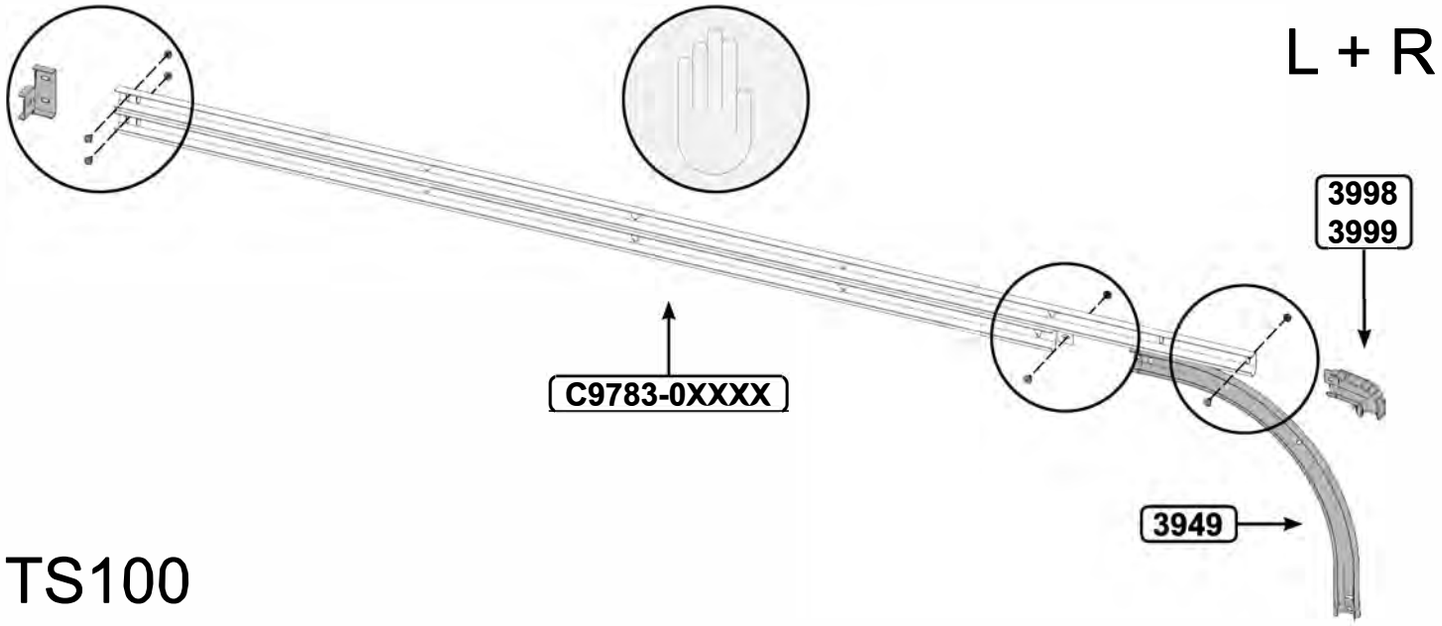
L + R
3998
3999
C9783-0XXXX
3949

TS100

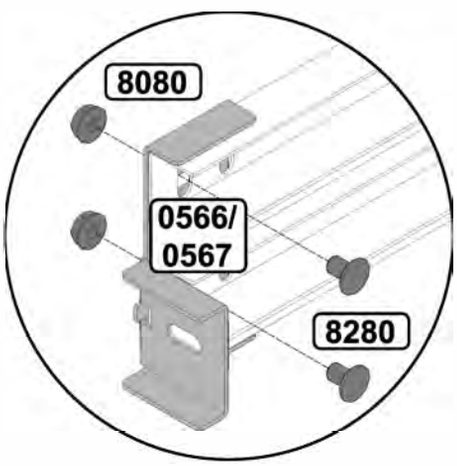
8080
0566/
0567
8280

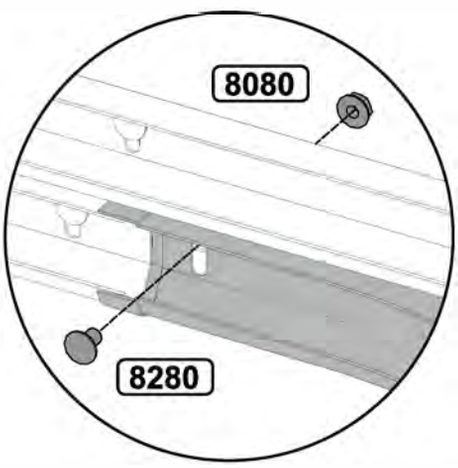
8080
8280

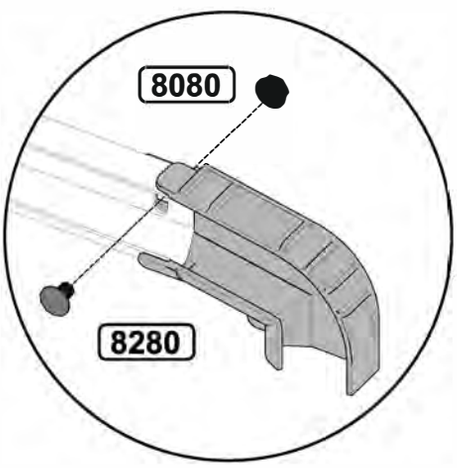
8080
8280

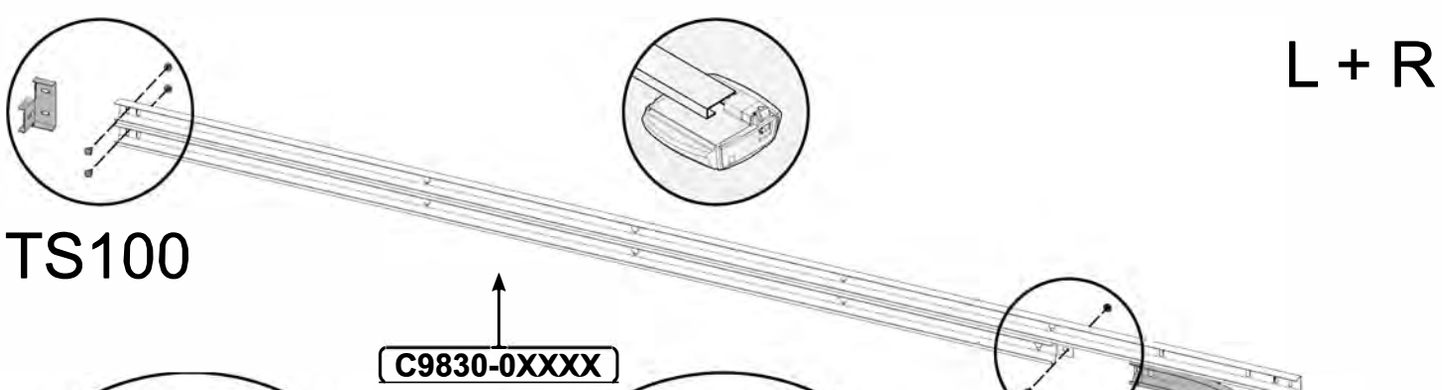
L + R
C9830-0XXXX
3949

TS100

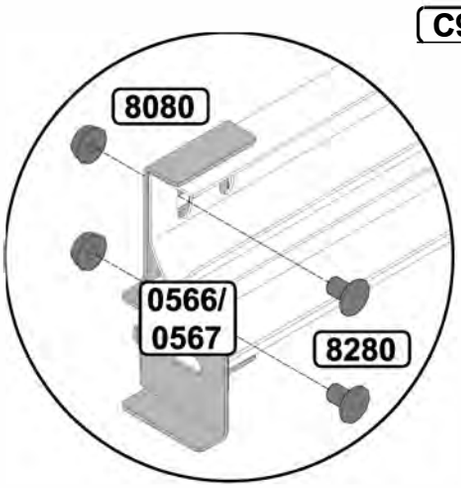
8080
0566/
0567
8280

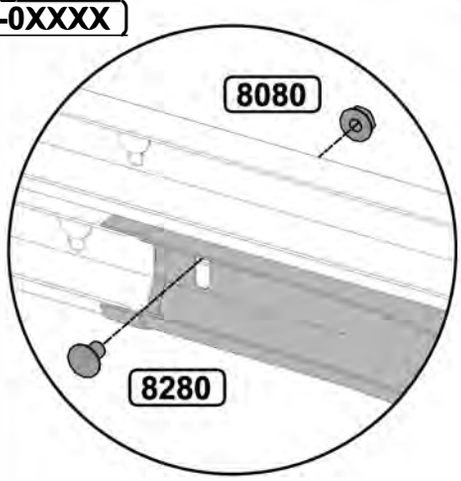
8080
8280

8080
0765
Option
8280
8080
0765
Option
8280
Option
Option
100kg+
8280
8080
0568
100kg+
8280
8080
0568

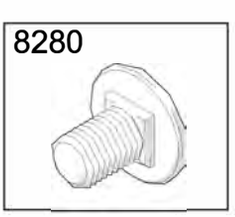

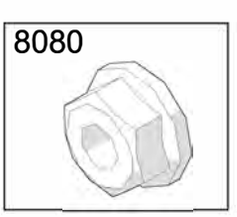

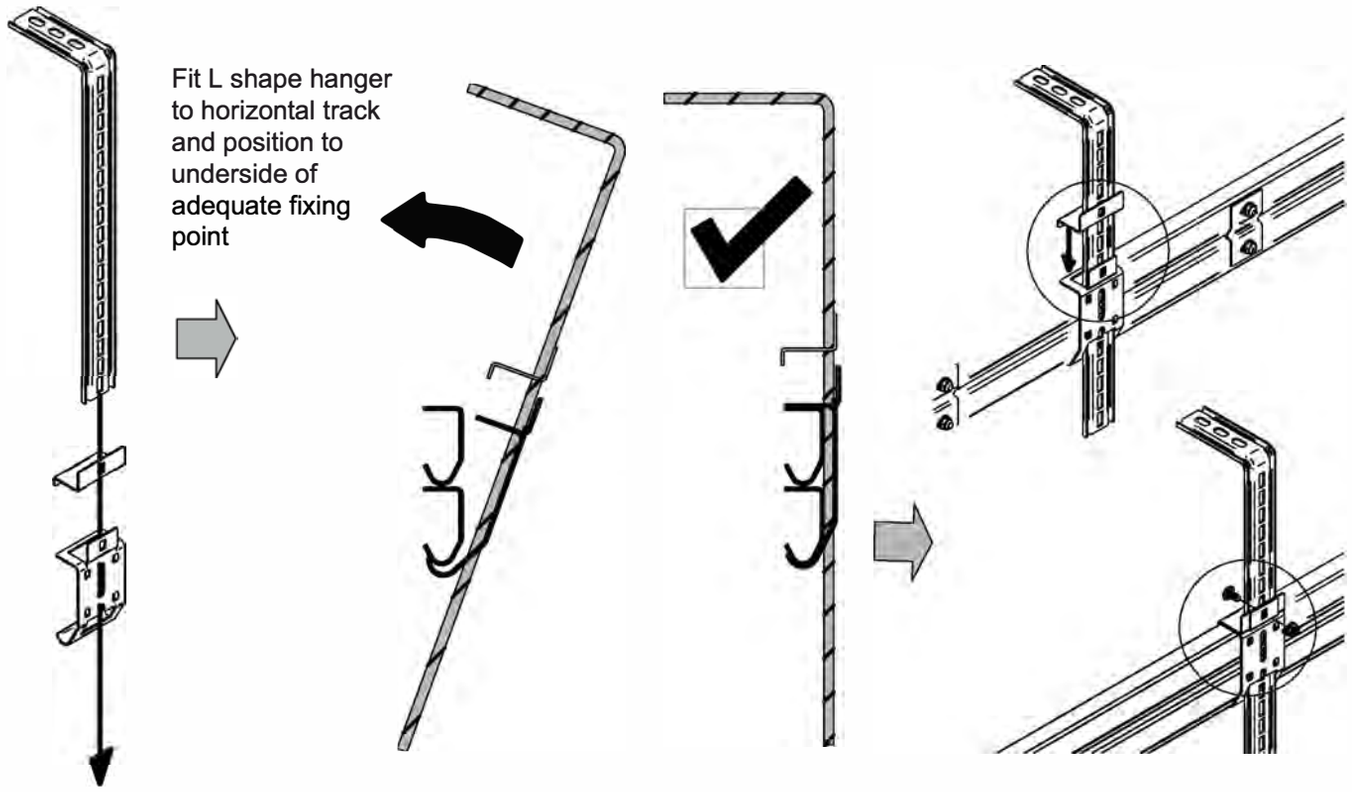
Fit L shape hanger to horizontal track and position to underside of adequate fixing point

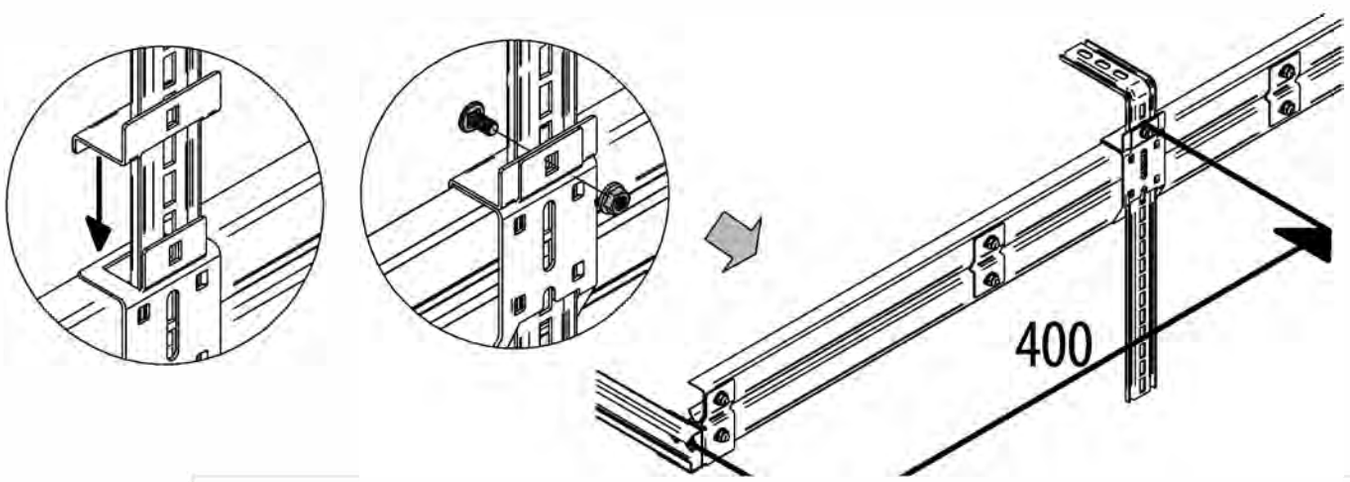
400

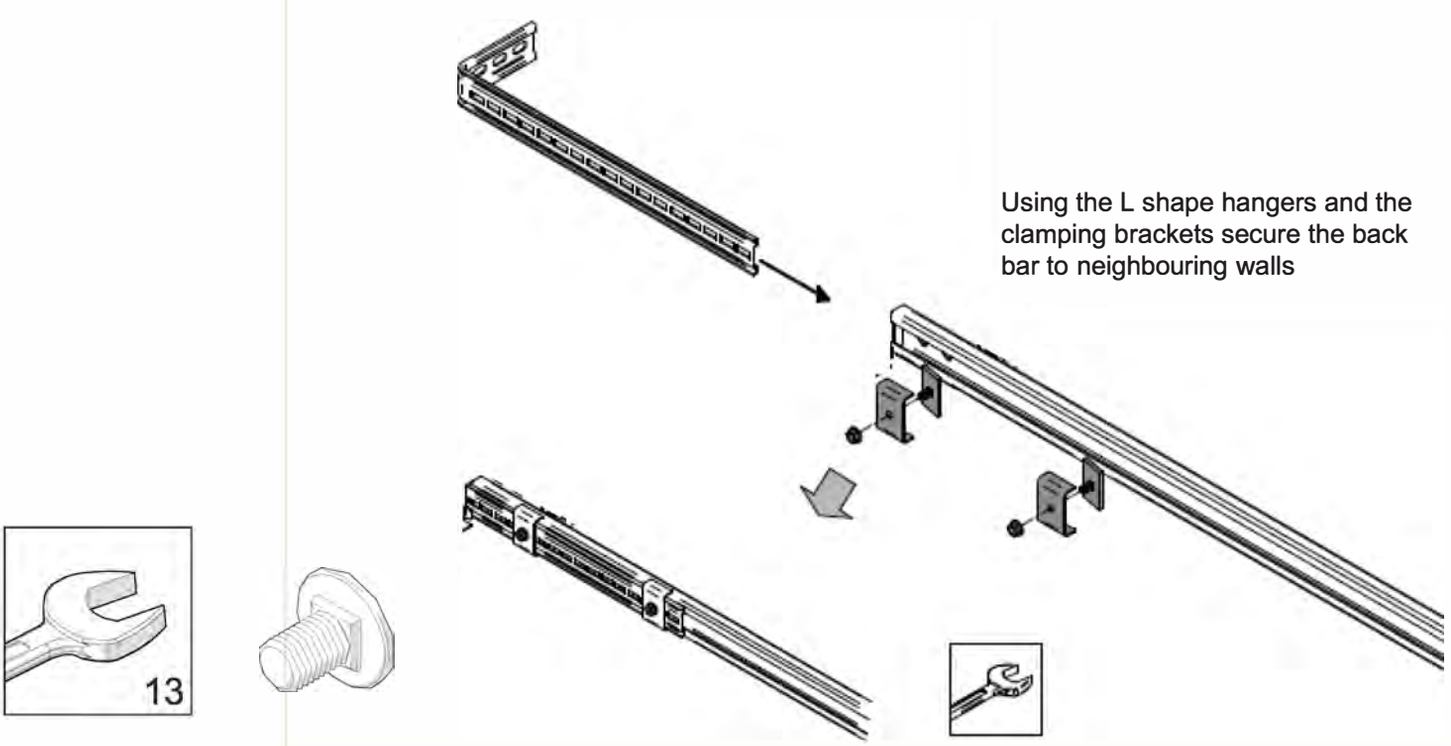
Using the L shape hangers and the clamping brackets secure the back bar to neighbouring walls
13

Measure from corner to corner to determine if the horizontal track area is square, adjust accordingly. Before securing the L shape hangers, ensure the horizontal tracks are level

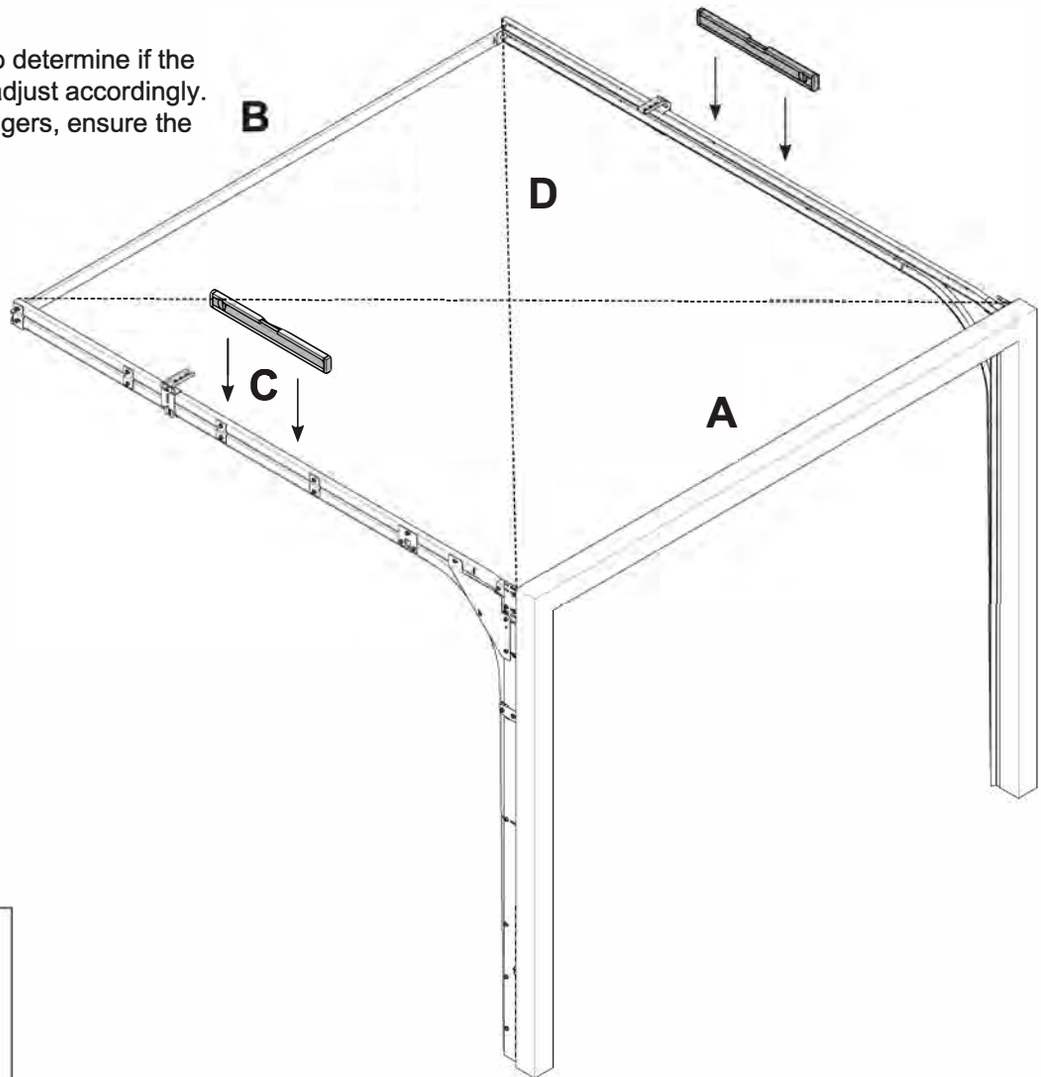

A = B
C = D

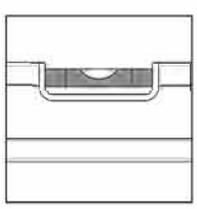

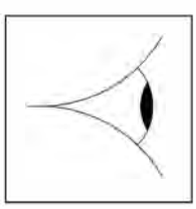

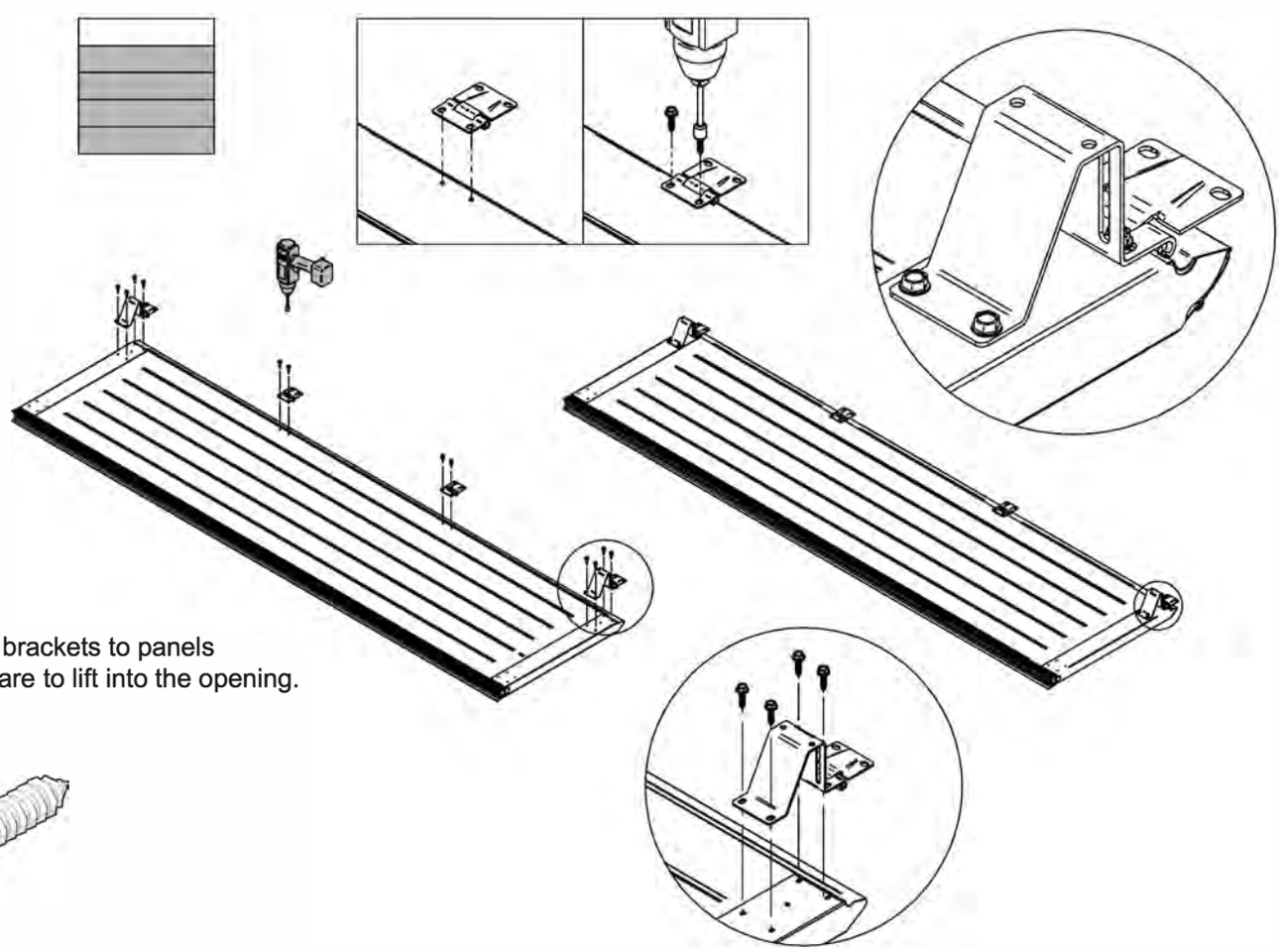

Fix roller brackets to panels
and prepare to lift into the opening.

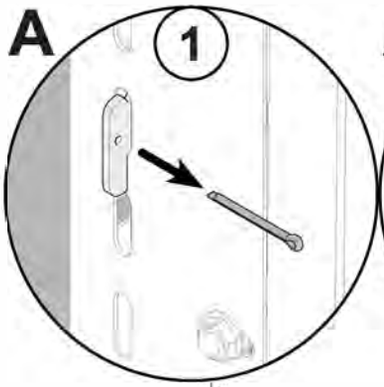

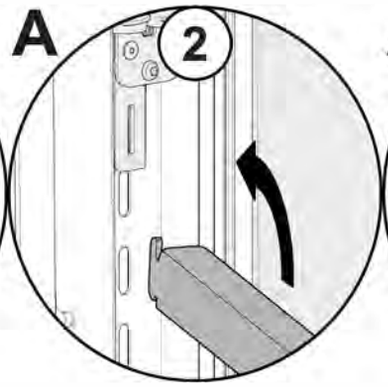

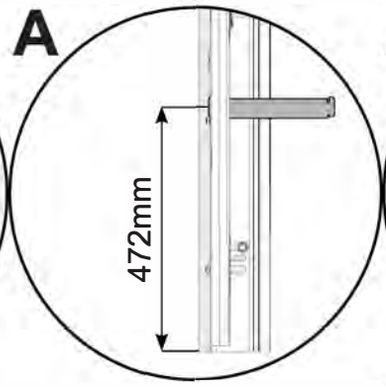

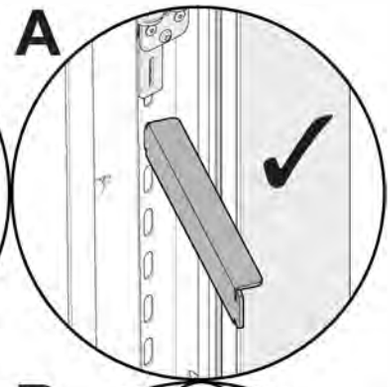

Insert the support bracket into position

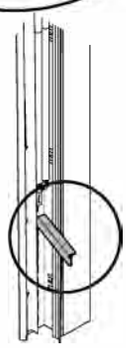

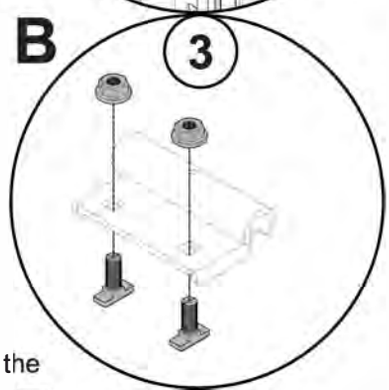

Lift the panel gently to the support bracket

Insert roller into the top of the panel

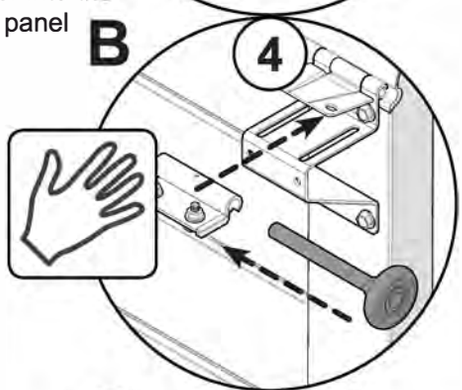

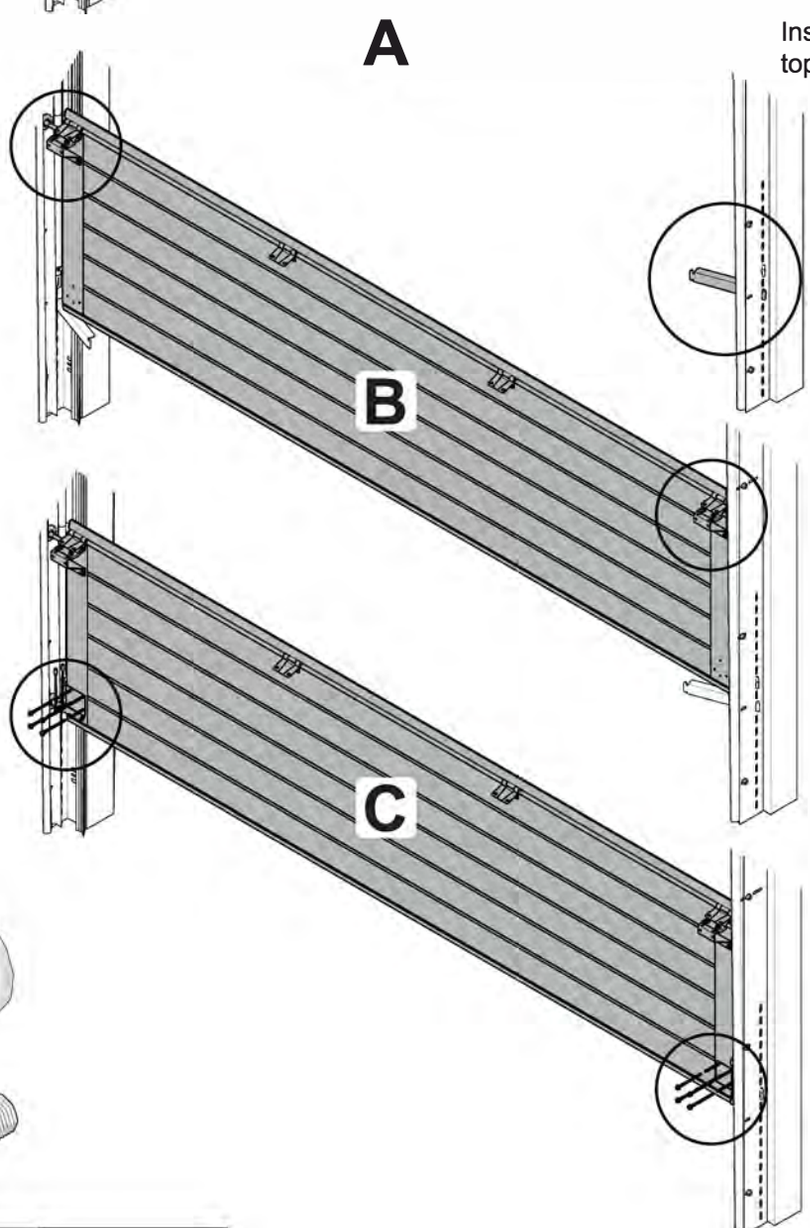

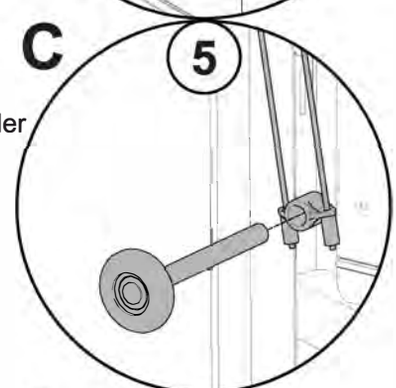

Feed the roller through the bottom of the cable.

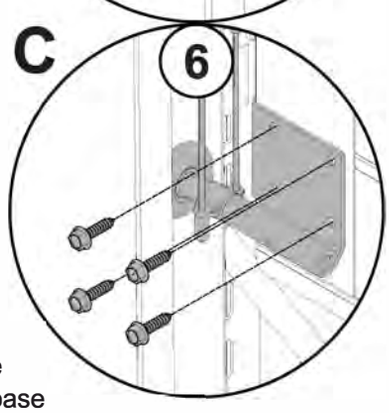

Secure the bottom of the roller to the base of the bottom panel. Repeat on both sides.

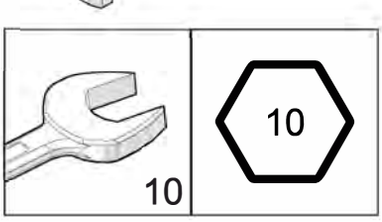

Once bottom rollers and brackets are secure lift the panel gently and remove the support brackets

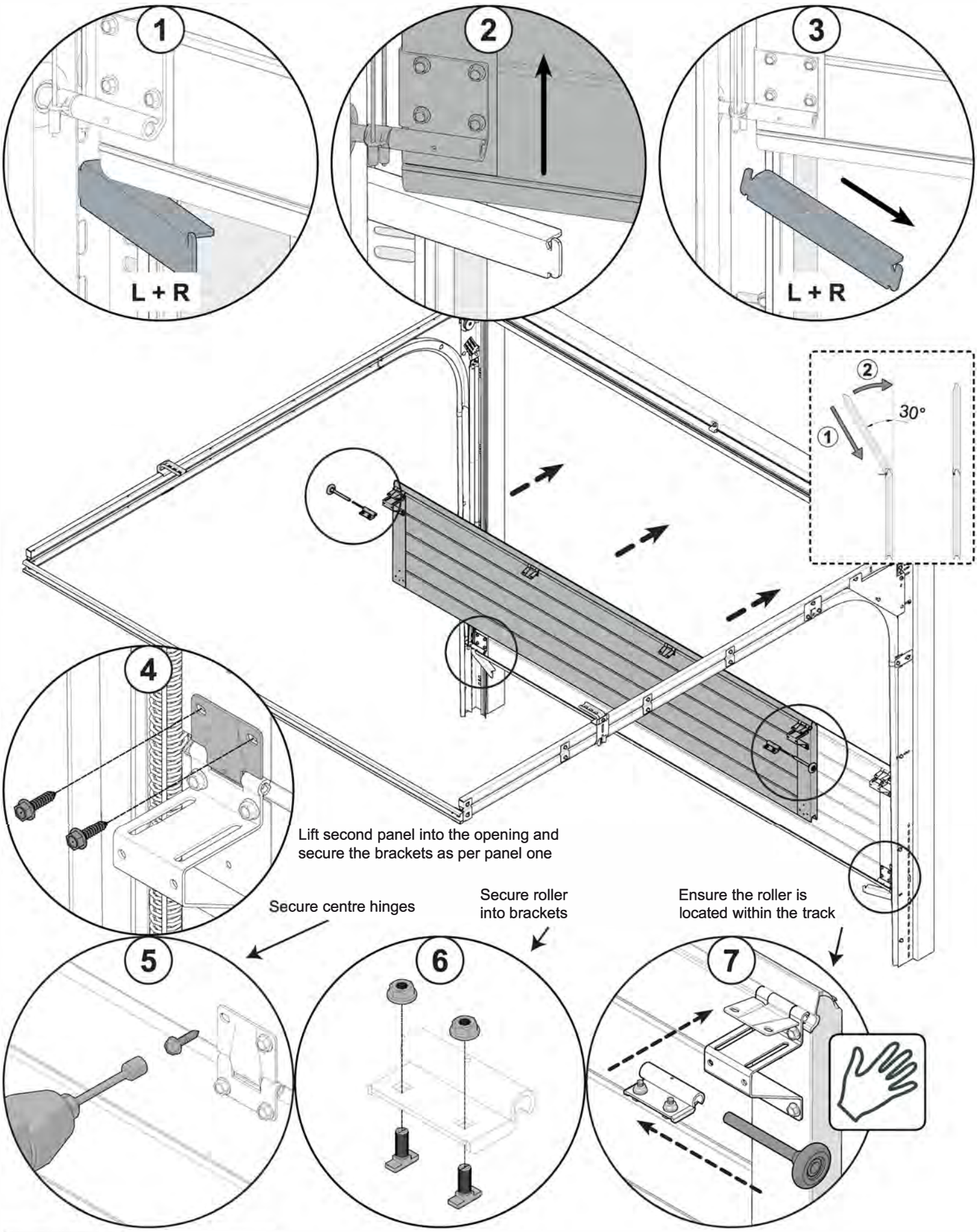

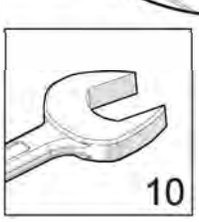

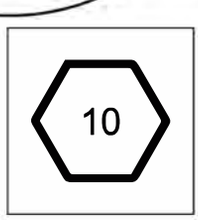

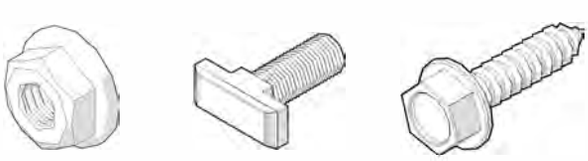

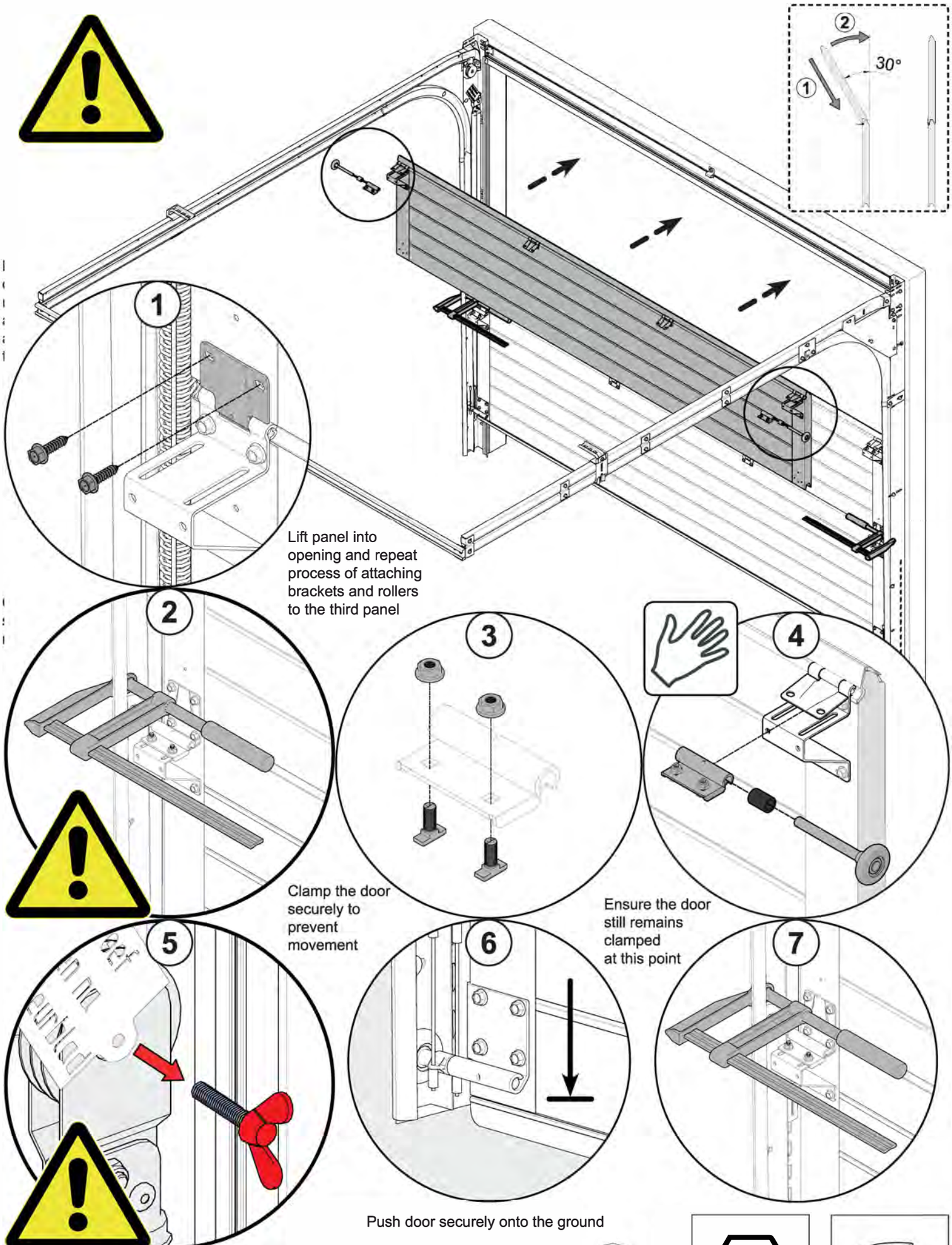

Before removing the red screws, ensure the door is clamped securely. Remove pin

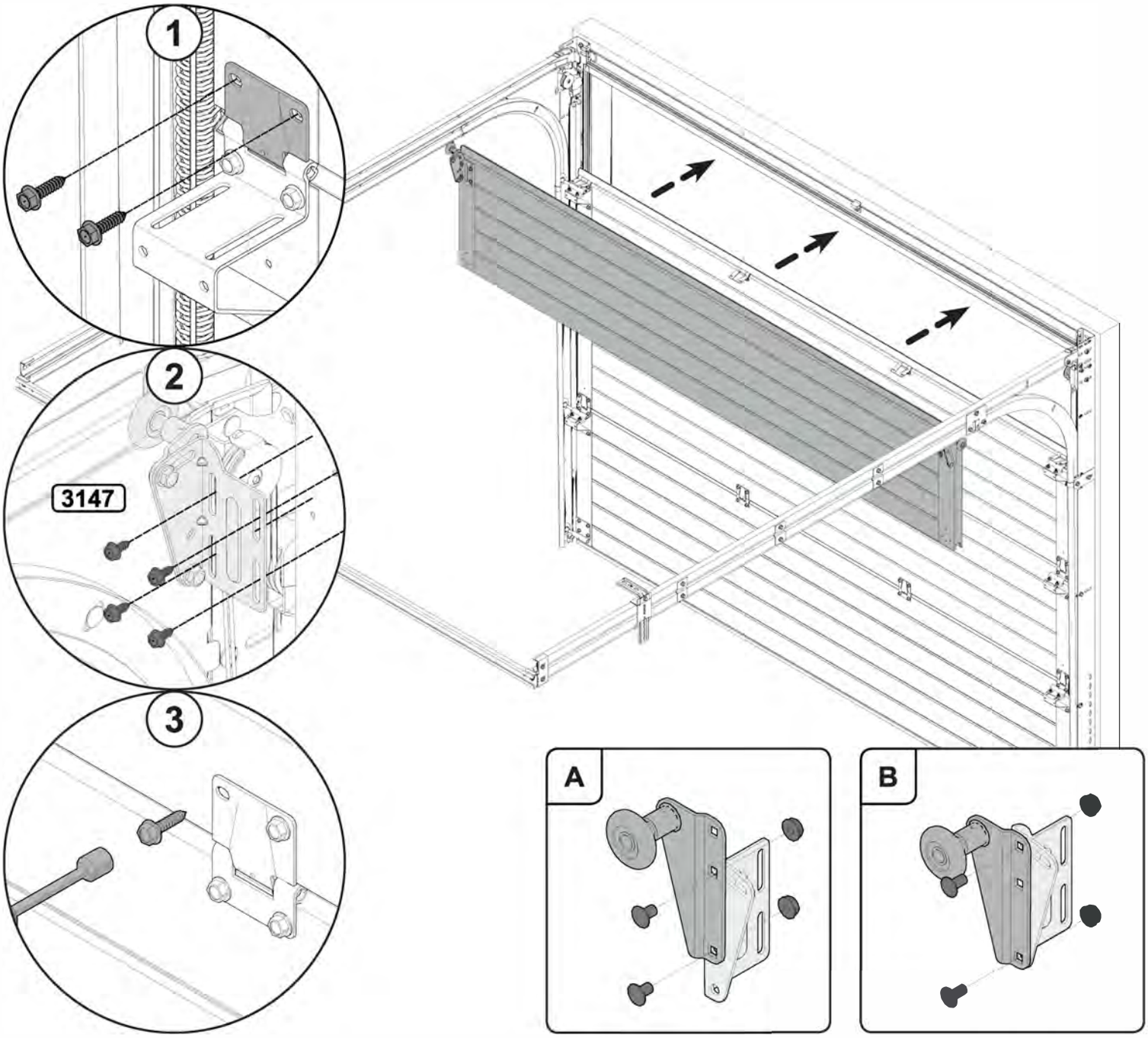
1
2
3147
3
A
B

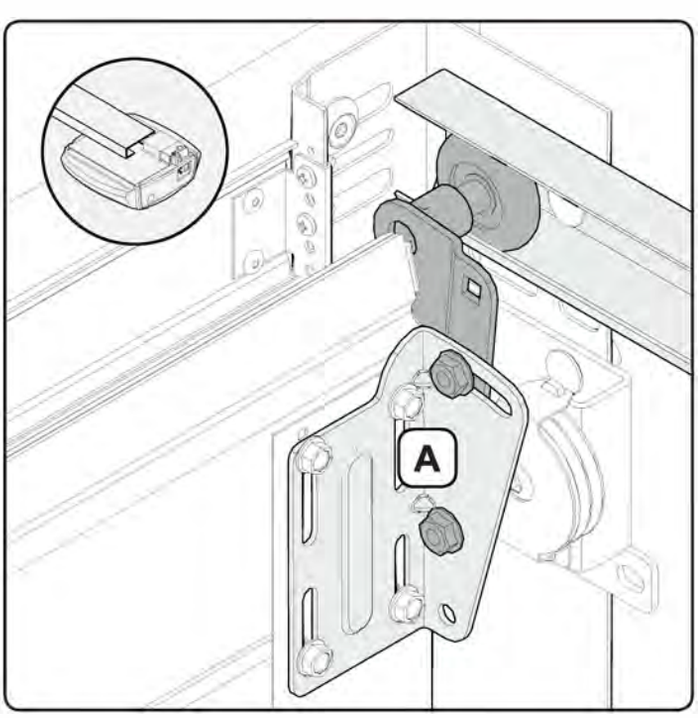
A

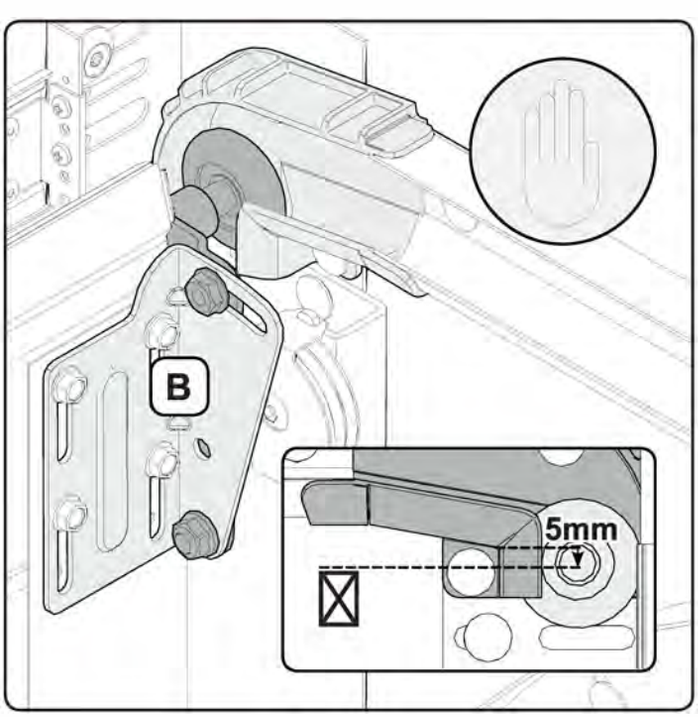
B
5mm

10

Push the top panel into the opening and secure hinges.

1

3812

2

3812

Fix top roller brackets to the top of the panel.

Ensure all hinges are securely fixed.

3

3812

30°

Adjust top roller for manual or electric operation

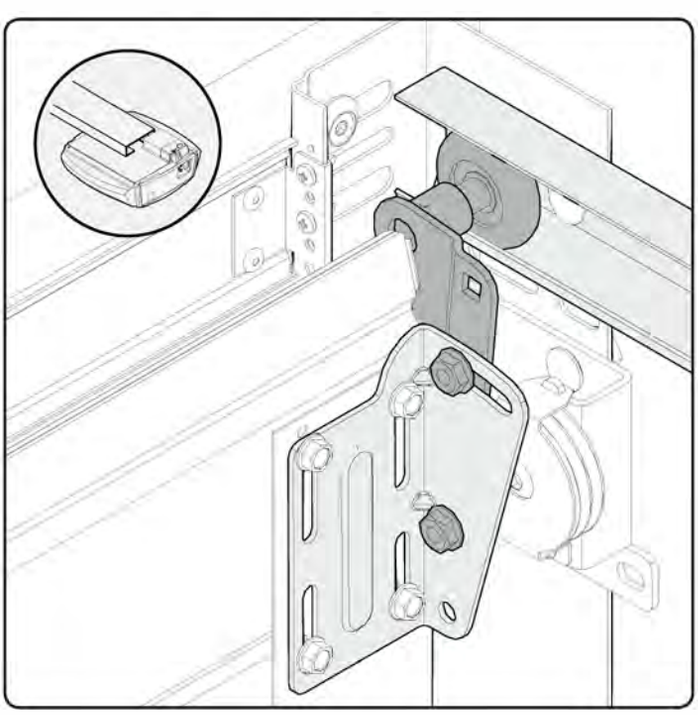

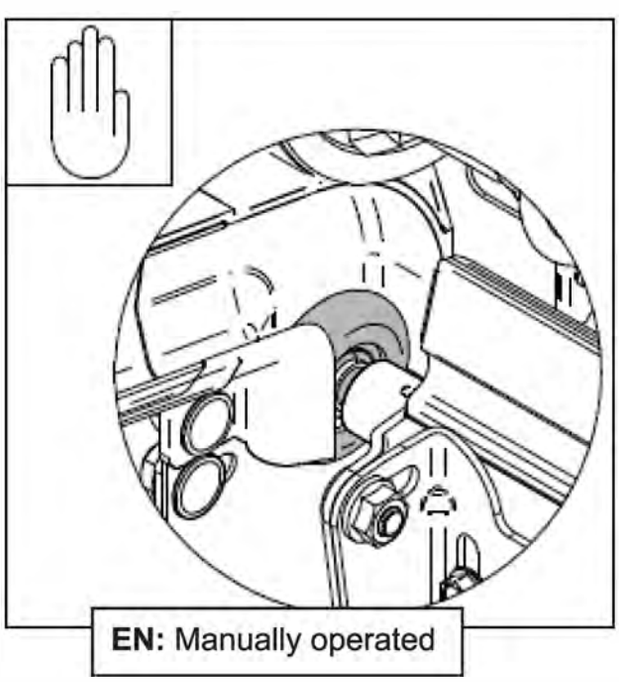

Reveal Options

Executive Framing Kit

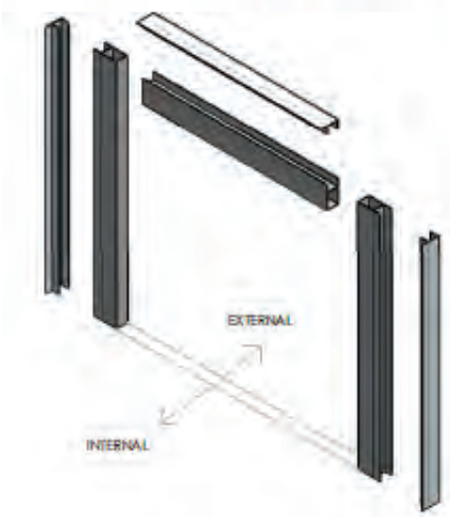

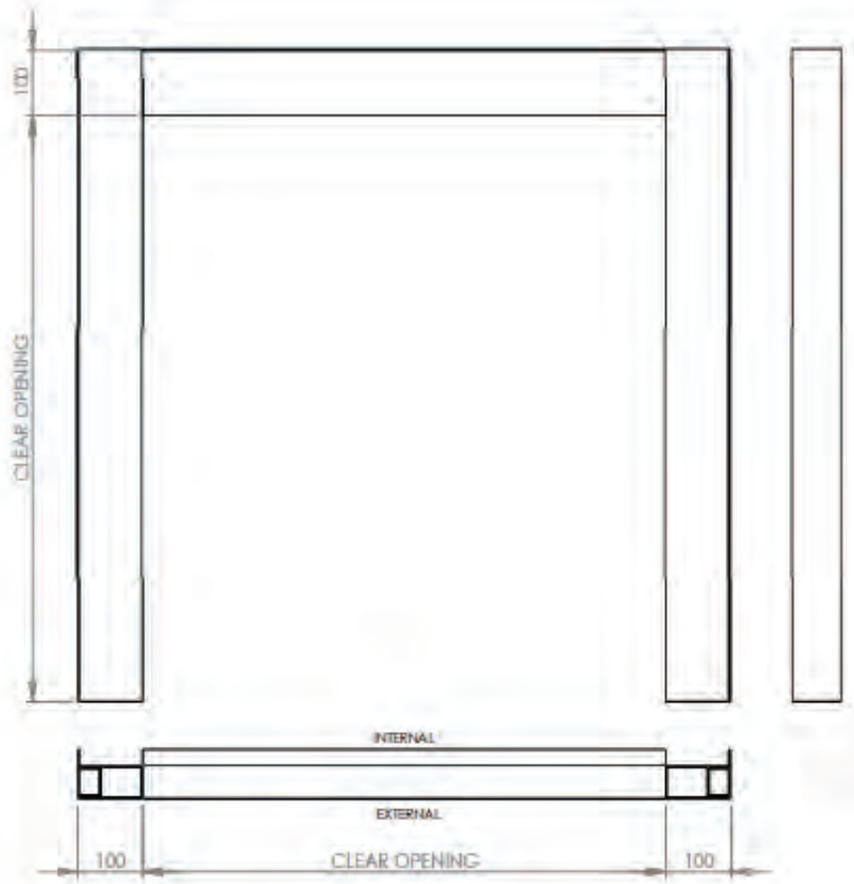

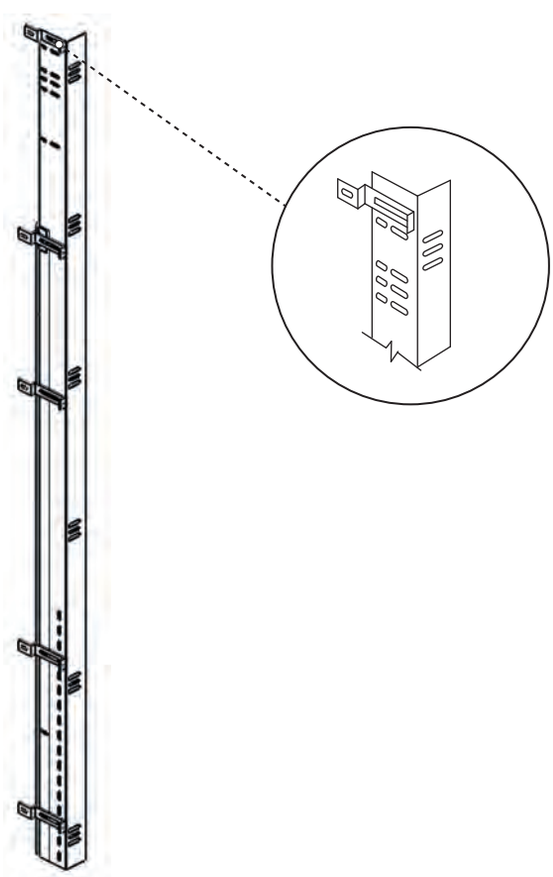

Reveal Brackets

Position 5 per side.
Secure each bracket with 2 M8 x 18 bolts and M8 serrated nuts.

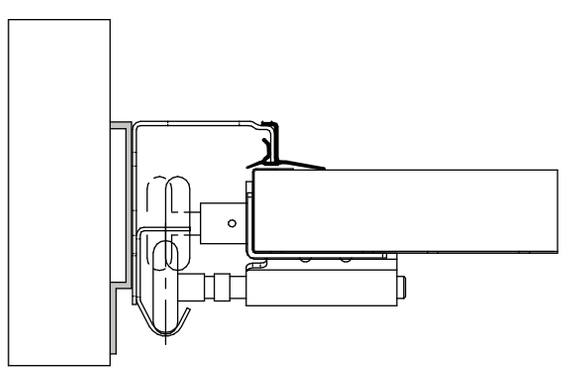

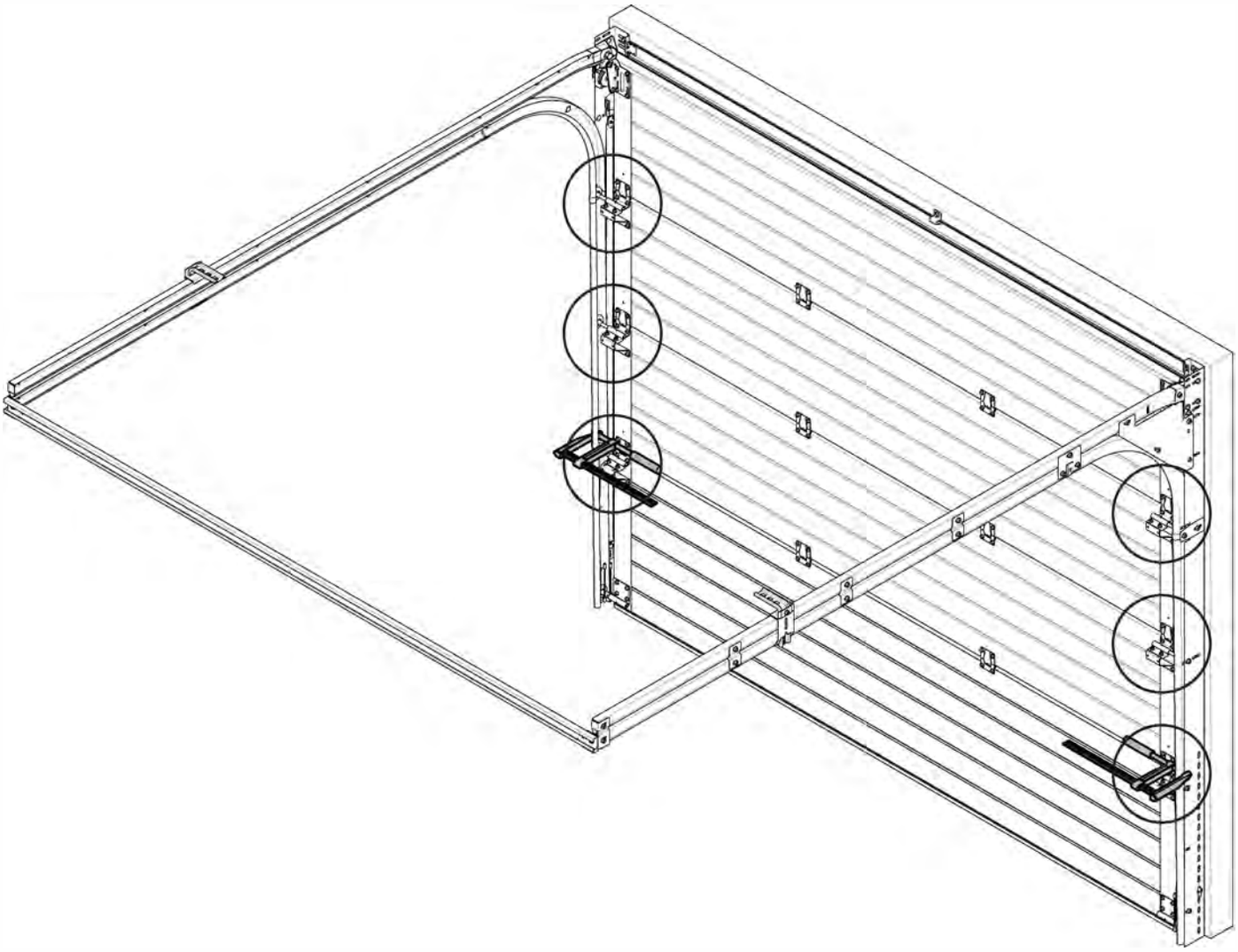

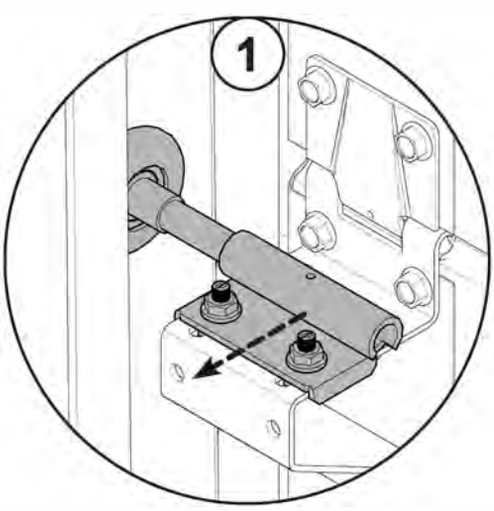

Position rollers & brackets so the roller can freely move within the track.
Secure bracket when completed.

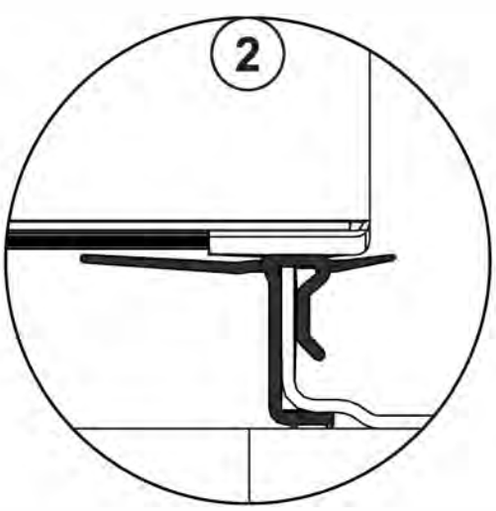

Adjust panel to suit the weather seal

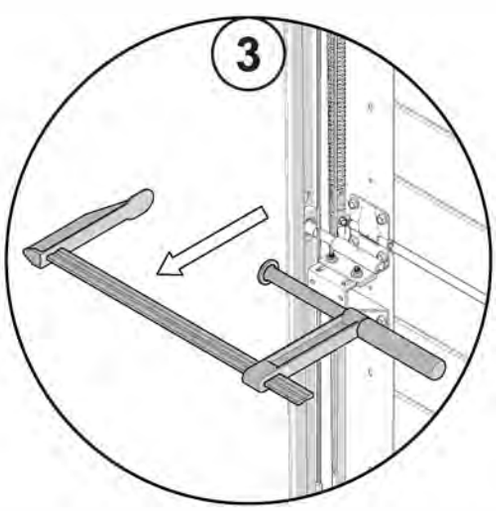

Remove clamp

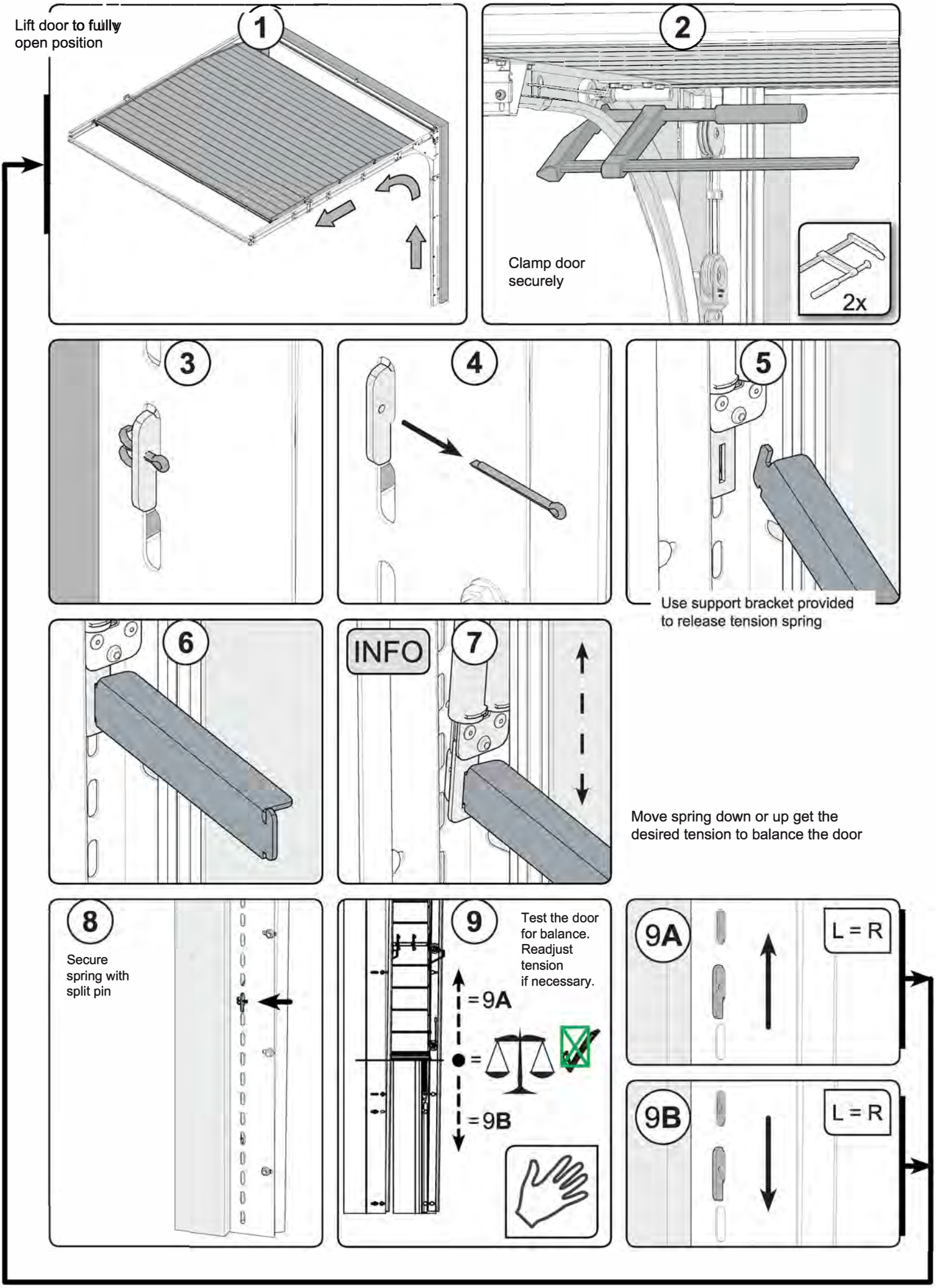
Lift door to fully open position
1
2
Clamp door securely
2x
3
4
5
Use support bracket provided to release tension spring
6
INFO
7
Move spring down or up get the desired tension to balance the door
8
Secure spring with split pin
9
Test the door for balance. Readjust tension if necessary.
=9A
=
=9B
9A
L = R
9B
L = R

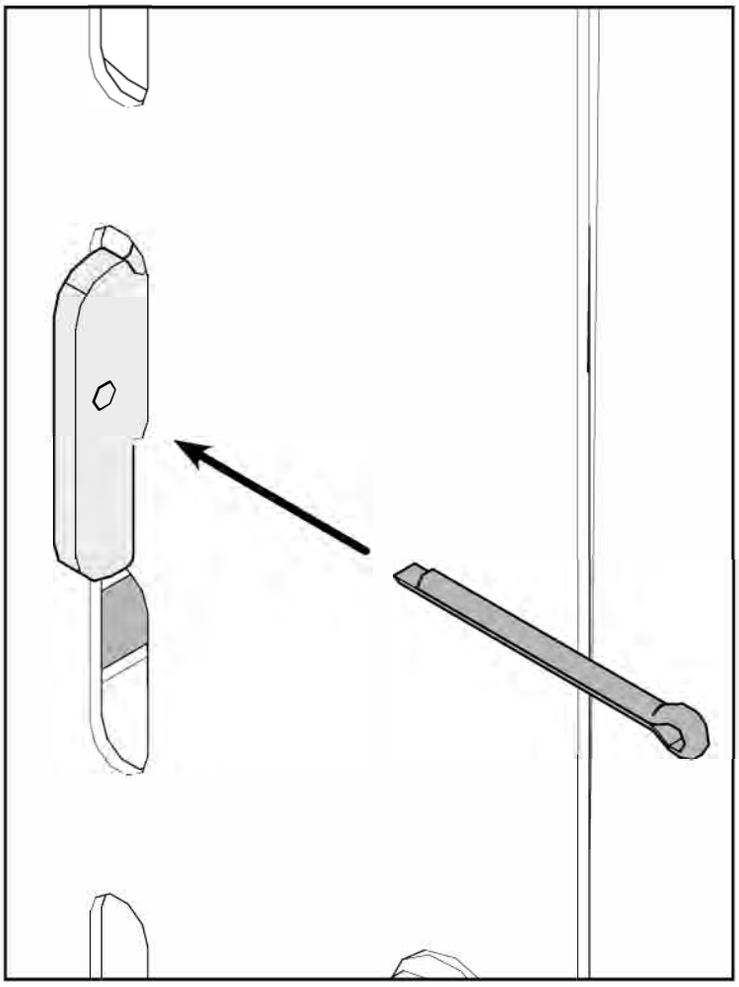

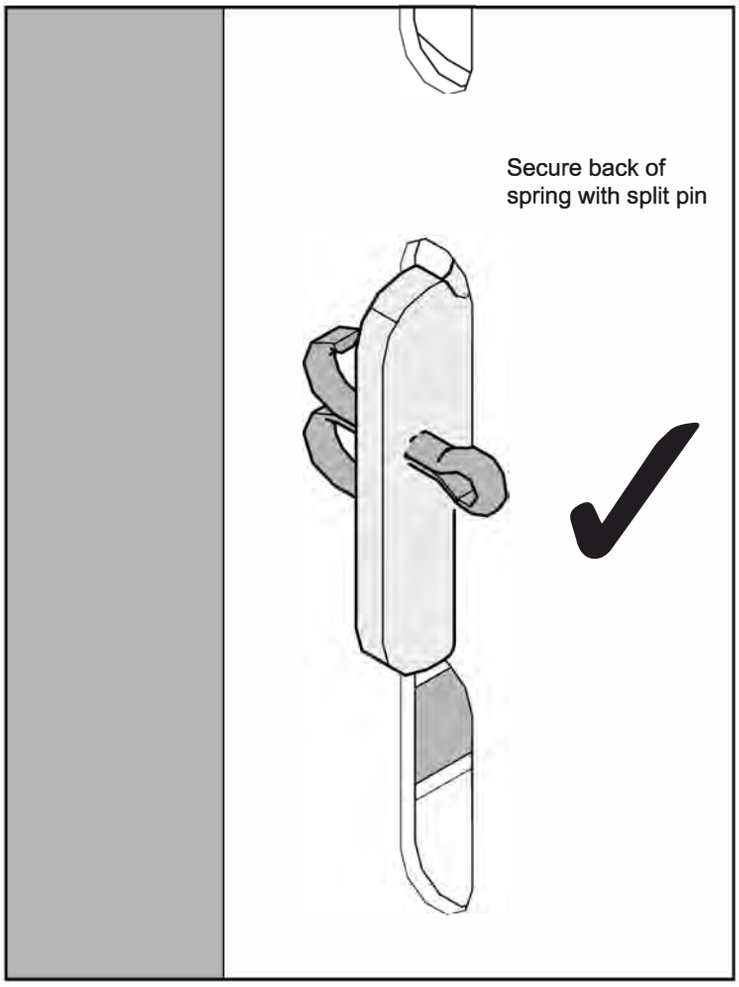
Secure back of
spring with split pin

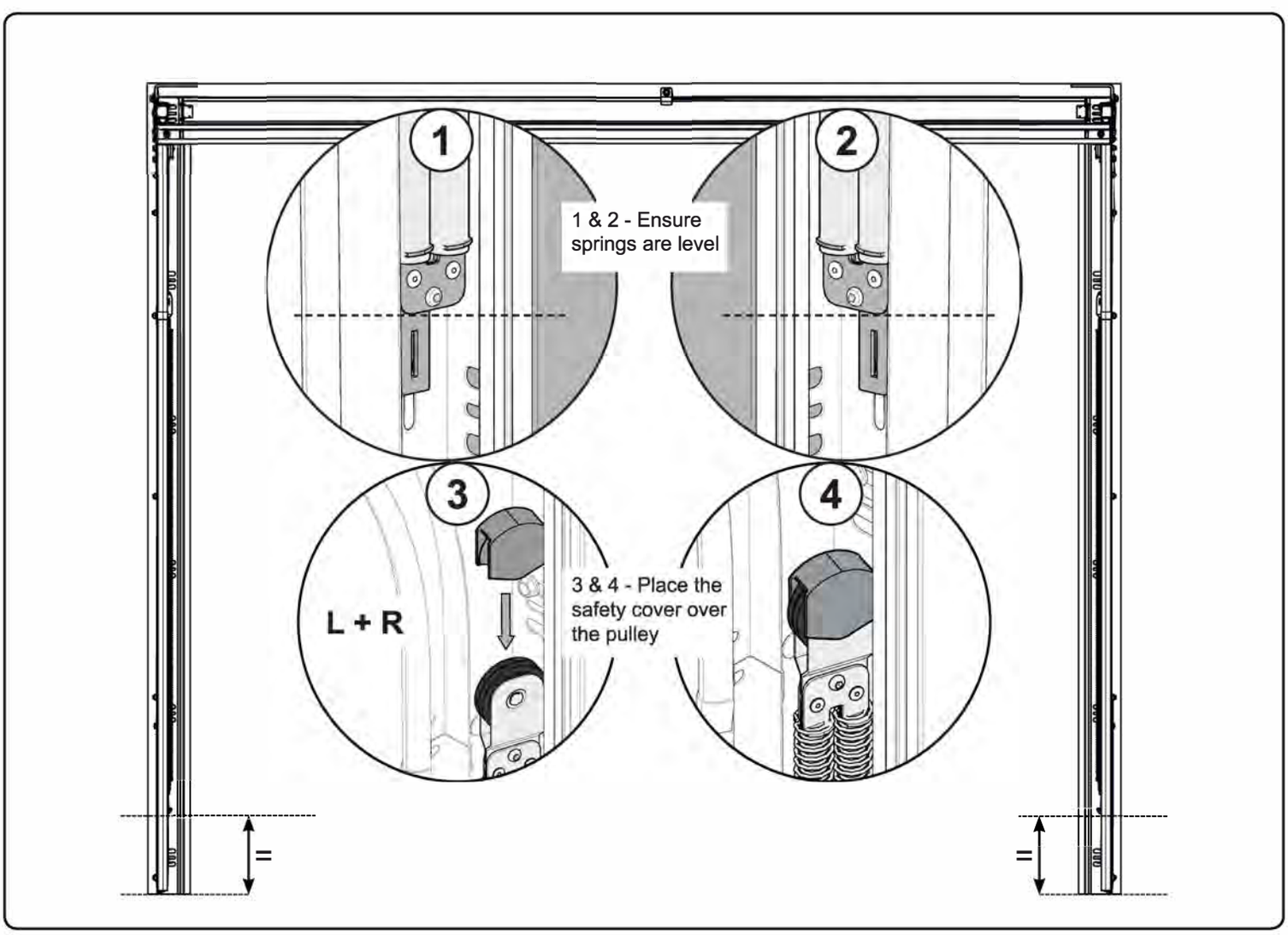
1
2
1 & 2 - Ensure
springs are level
3
4
L + R
3 & 4 - Place the
safety cover over
the pulley
=
=

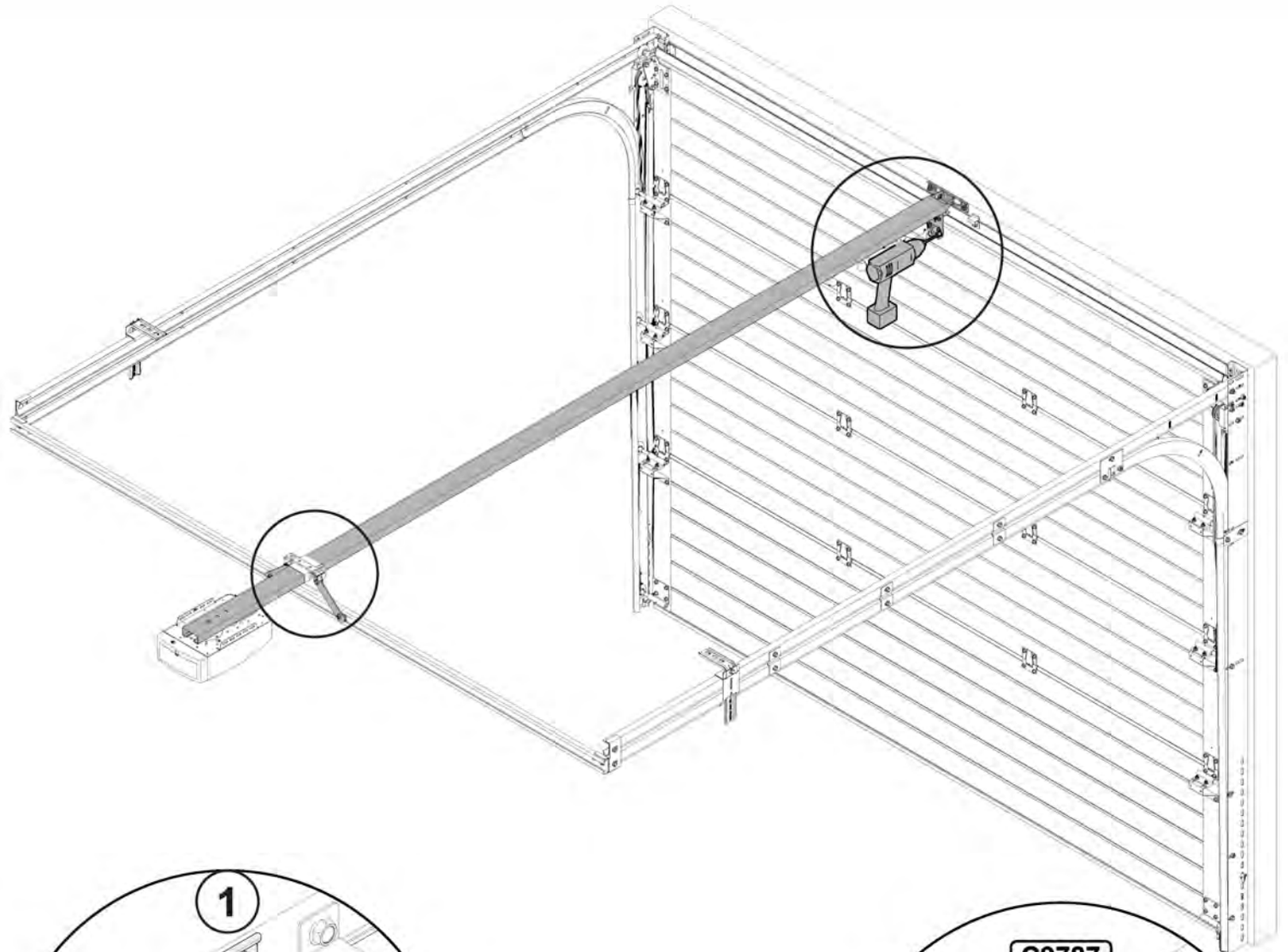

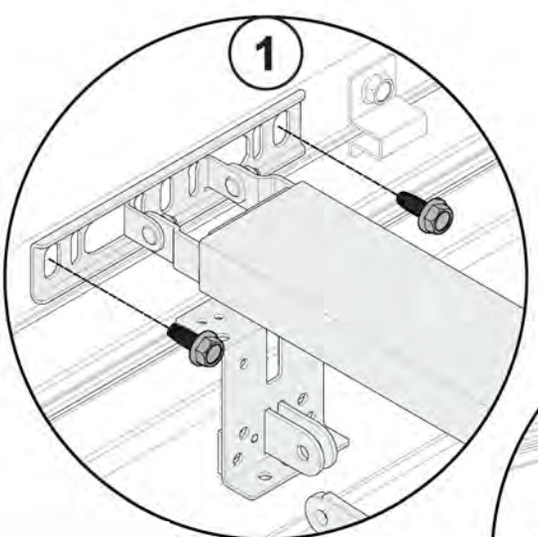
1

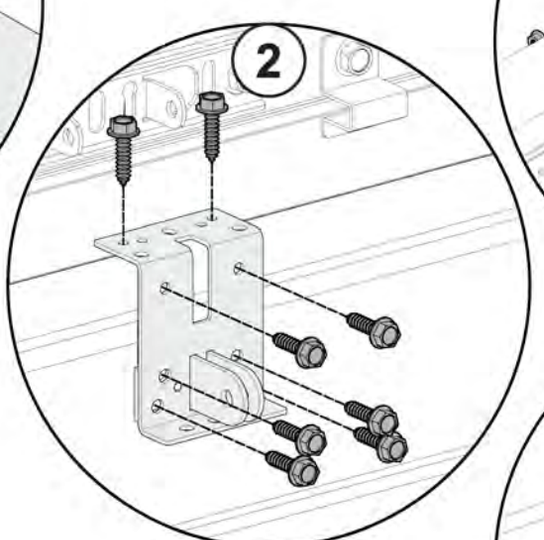
2

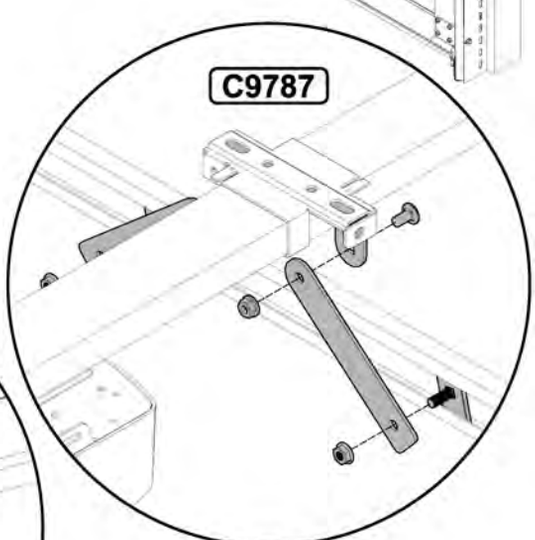
C9787

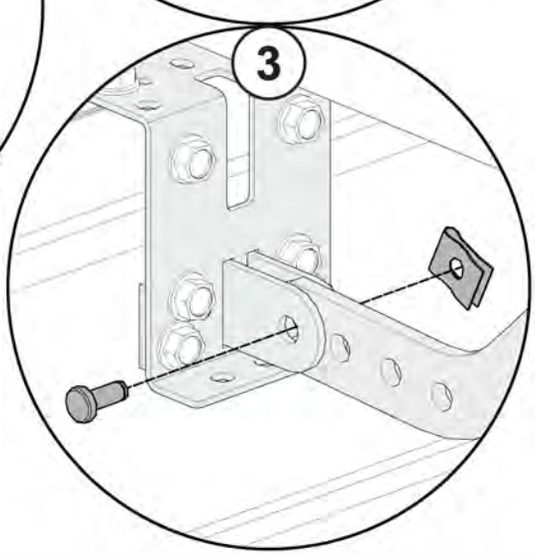
3

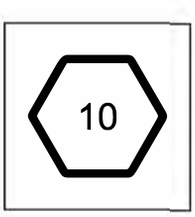
10

3814 (16mm)/
3812 (25mm)

C9958
C9959

Spring Guards

Starting at the top, hook the flat section behind the weather seal and bend the curved section behind the roller channel.

Then work the curved section behind the roller channel all the way to the floor.

Repeat on the remaining side and check the spring pully is clear of the plastic guards.

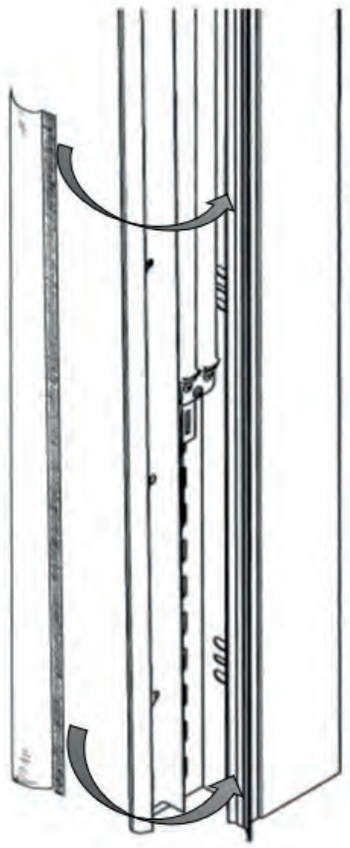

[1]. Releasing the motorisation
Pull on the cord until the door drive system is released

[2]. Manual manipulation of the door
This is possible as the drive system is released.

[3]. Re-engaging the motorisation
Move the door manually until the drive mechanism re-locks on the transmission rail.

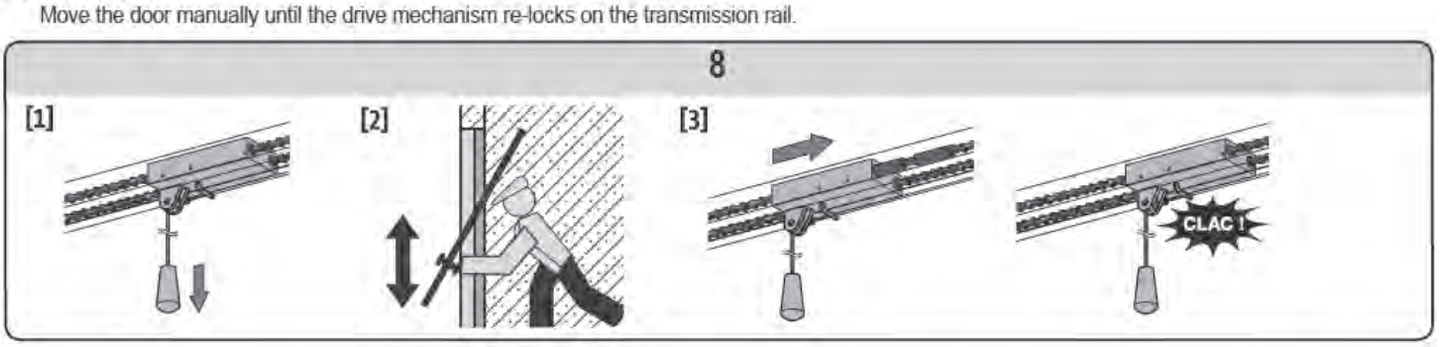

When releasing the motorisation, sudden movements may occur if the door is incorrectly balanced which may be dangerous.
Only use the cord to release the motorisation. Never use the cord to manipulate the door manually.
It is essential that the motorisation is re-engaged before any new commands.

www.garagedoorsonline.co.uk 01926 463888 www.garagedoorsonline.co.uk